ITEM 089018 NZ2RK-538SVM5

Description	Technical data	Accessories	Downloads

Features

- Steel roller ø 8 mm
- Plug connector SVM5

Approach direction

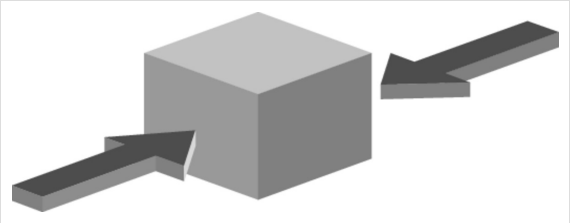

Figure
Horizontal
Can be adjusted in 90° steps

Switching element

538H Slow-action switching contact 2 NC

Approvals

Mechanical values and environment

Housing material	Anodized die-cast alloy
Weight	
Net	0,3 kg
Ambient temperature	-25 ... 80 °C
Degree of protection	IP67
Mechanical life	30×10^6
Contact material	Silver alloy, gold flashed
Switching principle	Slow-action switching contact
Installation position	Any
Number of door position positively driven contacts	2
Connection	
1 x	Plug connector M12 [1]
Approach speed	
max.	0,1 ... 50 m/min
Actuating element	
Plain bearing metal	Roller plunger [2]
Actuating force	15 ... 30 N

Electrical connection ratings

Rated thermal current I_{th}	4 A
Utilization category according to EN 60947-5-1	
AC-15	4A 30V
DC-13	4A 24V
Short circuit protection according to IEC 60269-1	
(Fuse)	4A gG
Rated insulation voltage U_i	50 V
Rated impulse withstand voltage U_{imp}	1,5 kV
Switching current	
Min. at DC 24V	1 mA

Reliability values acc. to EN ISO 13849-1

	Monitoring of the safety guard position
$B10_D$	20×10^6

[1] 5-pin

[2] d roller = 8 mm

Dimension drawing

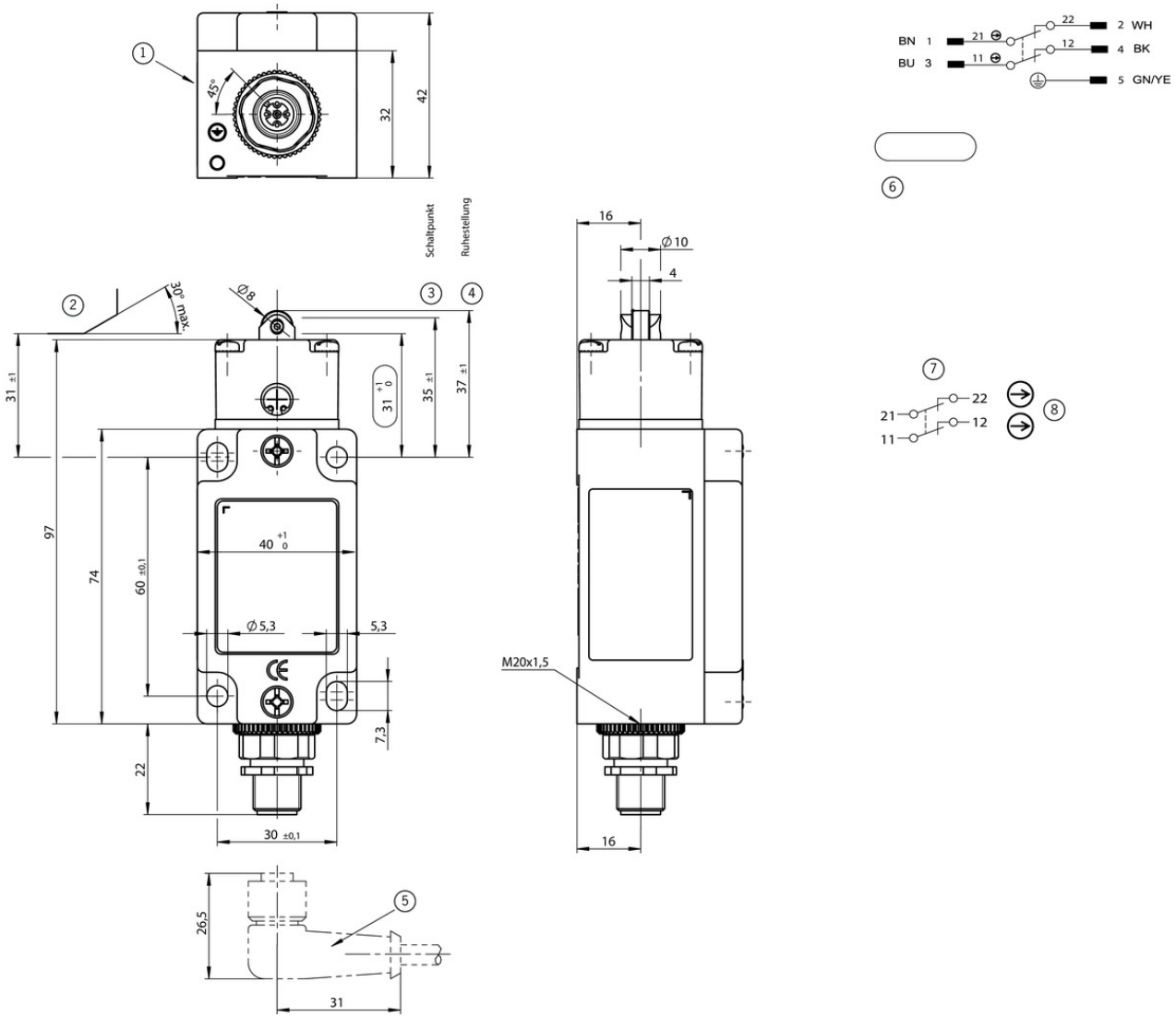

Legende

1 Guide lug aligned

2 Dog

3 Operating point

4 Free position

5 Right-angle plug connector: Plug connector adjustable to a max. of 270°. Default setting for cable outlet to the right. Related plug connectors are to be ordered separately.

6 Positive opening function is dependent on maintaining this distance. Actuator (dog) must be positively mounted on the machine. Switch can be replaced only with the same type.

7 Switching element in free position

8 Switching element ES538H slow-action contact element 2 NC contacts positive opening

538H

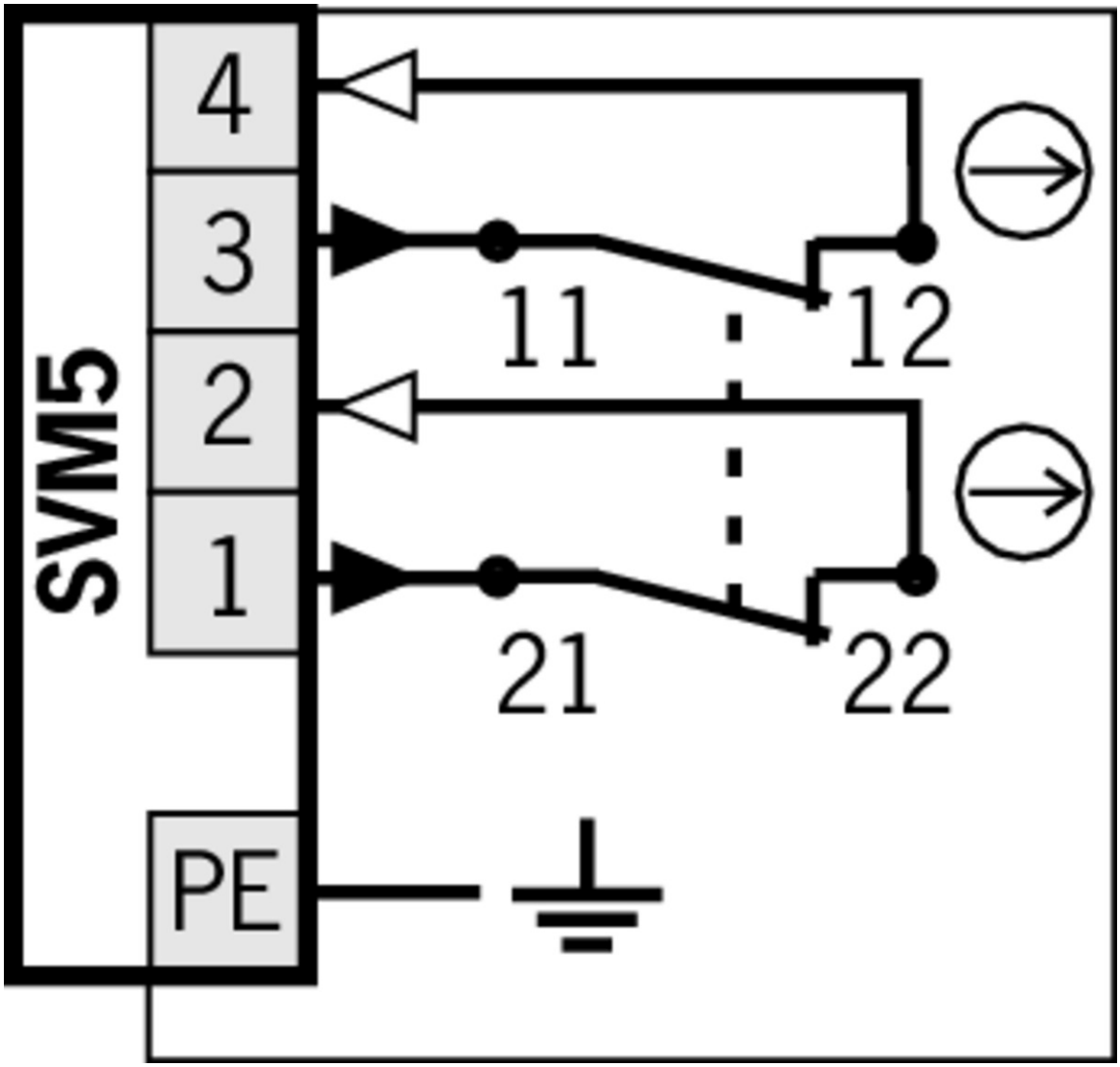

Travel diagram

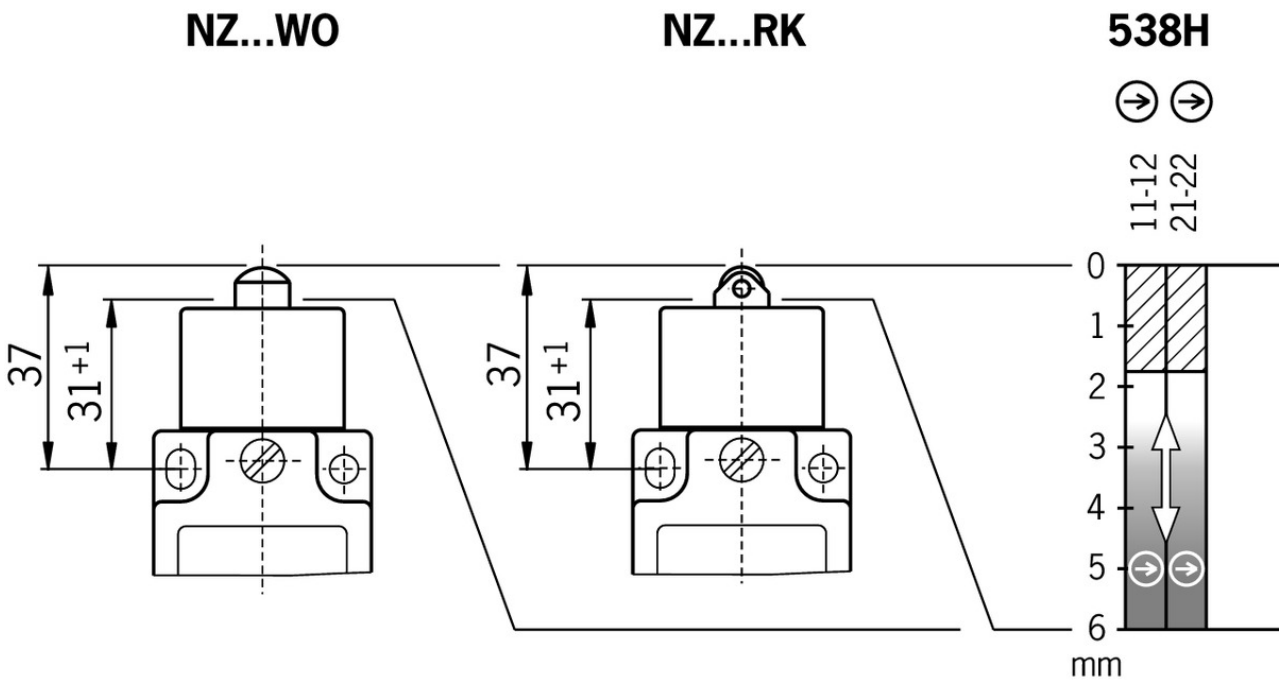

Legende

- Contacts closed
- Contacts open
- Contacts positively driven

Connection material

Connection cable with straight plug connector M12, 5-pin, 5m

073461 C-M12F05-05X050PU05,0-GA-073461

Features

- M12 female plug, 4-pin + PE
- Straight plug connector
- PUR cable
- Halogen-free
- Cable length 5 m
- With flying lead
- Cores color-coded

Connection cable with angled plug connector M12, 5-pin, 5m

073462 C-M12F05-05X050PU05,0-GA-073462

Features

- M12 female plug, 4-pin + PE
- Angled plug connector
- PUR cable
- Halogen-free

- Cable length 5 m
- With flying lead
- Cores color-coded

Instructions

Betriebsanleitung Sicherheitsschalter NZ.D.../NZ.W.../NZ.R...

	Doc. no.	Version	Language	Download
Betriebsanleitung Sicherheitsschalter NZ.D.../NZ.W.../NZ.R... Manual de instrucciones Interruptores de seguridad NZ.D.../NZ.W.../NZ.R... Mode d'emploi Interrupteur de sécurité NZ.D.../NZ.W.../NZ.R... Istruzioni di impiego Finecorsa di sicurezza NZ.D.../NZ.W.../NZ.R... Operating Instructions Safety Switch NZ.D.../NZ.W.../NZ.R...	074549	10-01/17		1.8 MB
Instrukcja obsługi Wyłącznik bezpieczeństwa NZ.D.../NZ.W.../NZ.R...	074549	10-01/17		0.4 MB
Инструкция по эксплуатации Предохранительный выключатель NZ.D.../NZ.W.../NZ.R...	074549	10-01/17		0.6 MB
Návod na prevádzku Bezpečnostný spínač NZ.D.../NZ.W.../NZ.R...	074549	10-01/17		0.4 MB

Catalogs

Sicherheitsschalter mit Metallgehäuse Safety Switches with Metal Housing Bezpečnostní spínače s kovovým pouzdrem Interrupteurs de sécurité avec boîtier métallique 金属壳体 的安全开关 Interruptores de seguridad con carcasa metálica

	Doc. no.	Version	Language	Download
Sicherheitsschalter mit Metallgehäuse	100319	11-03/18		7.9 MB
Interrupteurs de sécurité avec boîtier métallique	100676	11-03/18		7.9 MB
Interruptores de seguridad con carcasa metálica	104856	11-03/18		14.0 MB
Safety Switches with Metal Housing	100369	11-03/18		7.9 MB
Bezpečnostní spínače s kovovým pouzdrem	121650	11-03/18		7.9 MB
金属壳体 的安全开关	102453	11-03/18		8.2 MB

Declaration of conformity

EU prohlášení o shodě

	Doc. no.	Version	Language	Download

EU-Konformitätserklärung Declaración UE de conformidad Déclaration UE de conformité Dichiarazione di conformità EU declaration of conformity	2077153	25-02/17		0.3 MB
EU prohlášení o shodě EU-overensstemmelseserklæring Δήλωση συμμόρφωσης της ΕΕ EU-vaatimustenmukaisuusvakuutus EU-típusbizonyítvány EU-conformiteitsverklaring Deklaracja zgodności UE Declaração de Conformidade UE Declarația de conformitate UE EÚ vyhlásenie o zhode	2077153	25-02/17		0.5 MB

CAD data

CAD data for this item on TraceParts