Product discontinued until 31.12.2018

MASI65 I/O MODULE, 4 digital inputs, 4 digital outputs

4 inputs 0.2 A
4 outputs 0.5 A
8 × M8

Link to Product

Illustration

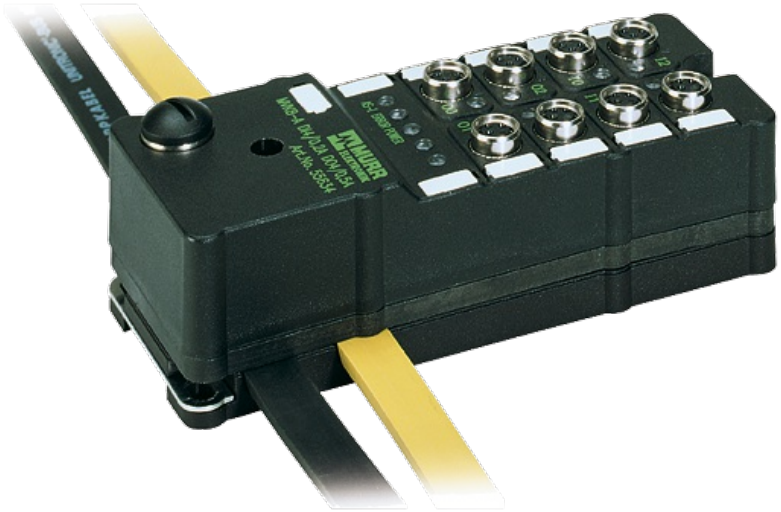

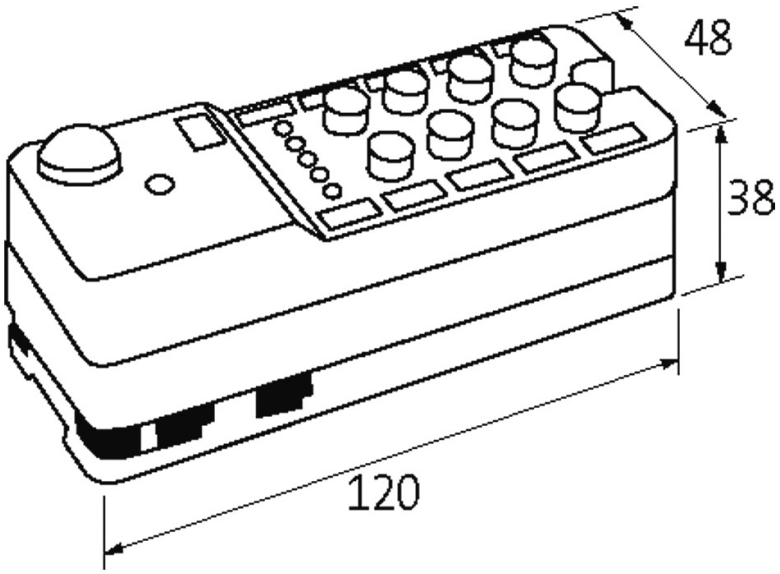

Product may differ from Image

Approvals

The information in this brochure has been compiled with the utmost care.
Liability for the correctness completeness and topicality of the information is restricted to gross negligence. Version: 03/19

MURR ELEKTRONIK
stay connected

Input	
Sensor supply US	max. 200 mA from AS-Interface (short-circuit and overload protected)
Type	for 3-wire sensors or mechanical switches, PNP
Technical Data	
Total current (AS-Interface)	max. 250 mA
Bus voltage (AS-Interface)	26.5...31.6 V DC
Addressing	1...31 via address port
Profile (IO/ID/ID2 code)	S-7.0.E
General data	
Protection	IP67
Dimensions H × W × D	33×48×120 mm
Temperature range	0...+55 °C
Output	
Supply voltage	24 V DC external (18...30.2 V DC) EN 61131-2, connection via black AS-Interface profile cable
Switching current per output	max. 0.5 A (short-circuit and overload protected)
Total current	max. 2 A
Diagnostic	
Communication status	via LED
Diagnostic via LED	per module
Monitoring - no voltage	yes
Commercial data	
country of origin	CZ
customs tariff number	85176200
EAN	4048879050319
eClass	27242604
Packaging unit	1

The information in this brochure has been compiled with the utmost care.
Liability for the correctness completeness and topicality of the information is restricted to gross negligence. Version: 03/19