MURR ELEKTRONIK
stay connected

IR RELAY SOCKET MODULES

IN: 250 V / 250 VAC/DC / 10 A

for industrial relays
4 NO/NC contacts
0...230 V AC/DC
without components

Link to Product

Illustration

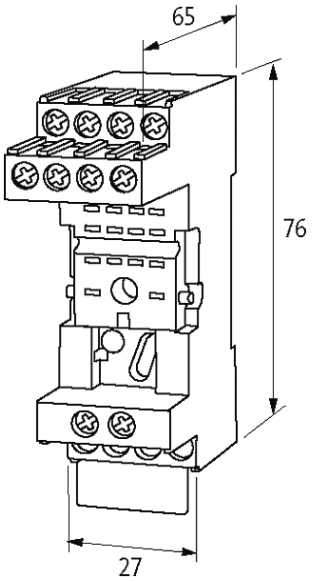

The information in this brochure has been compiled with the utmost care.
Liability for the correctness completeness and topicality of the information is restricted to gross negligence. Version: 03/19

Murrelektronik GmbH | Falkenstraße 3 | 71570 Oppenweiler | Fon +49 (71 91) 47-0 | Fax +49 (71 91) 47-491000 | shop@murrelektronik.com | shop.murrelektronik.com

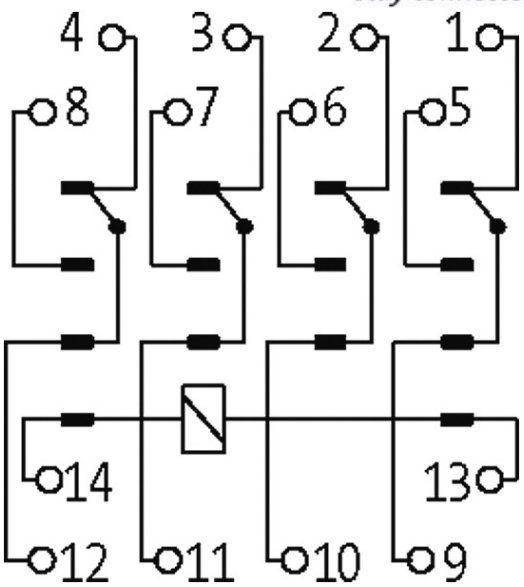

Product may differ from Image

Technical Data	
Switching voltage	max. 250 V AC/110 V DC
Switching current	max. 5 A
General data	
Mounting method	DIN-rail mountable (EN 60715)
Protection	IP40
Connection	Spring clamp terminals
Dimensions H × W × D	76.5×27×65 mm
Commercial data	
country of origin	IT
customs tariff number	85366990
EAN	4048879025935
eClass	27371603
Packaging unit	1

The information in this brochure has been compiled with the utmost care.
Liability for the correctness completeness and topicality of the information is restricted to gross negligence. Version: 03/19