MURR ELEKTRONIK
stay connected

PRE-WIRED CAP FOR EXACT8, 10XM8, 3 POLE

15.0m PUR/PVC 10x0,34+2x0,75

for 10-way distribution box, 3-pole
PUR/PVC
15.0 m

Further cable lengths on request. Plastic housings with good resistance against chemicals and oils. The resistance to aggressive media should be individually tested for your application. Further details on request.

Link to Product

Illustration

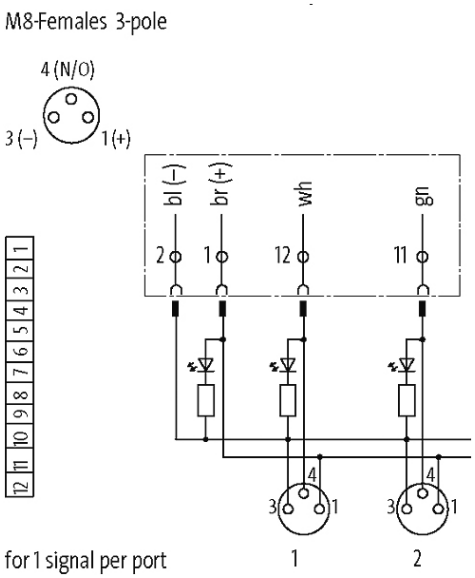

The information in this brochure has been compiled with the utmost care.
Liability for the correctness completeness and topicality of the information is restricted to gross negligence. Version: 03/19

MURR ELEKTRONIK
stay connected

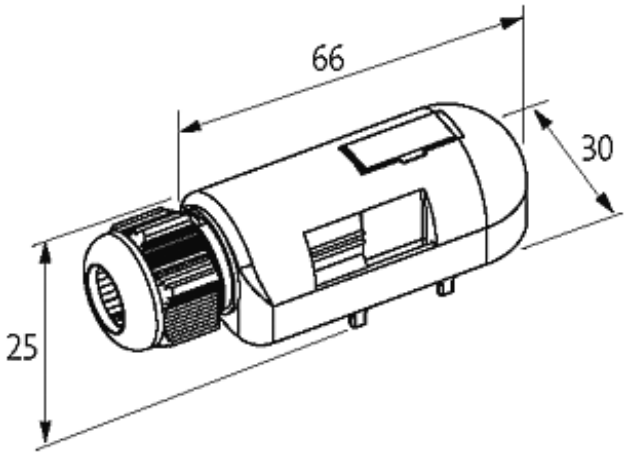

Product may differ from Image

Approvals

c UL us Listed

Cables

Cable number	385
No./diameter of wires	10×0.34 + 2×0.75 mm²
Wire isolation	PVC (br, bl, wh, gn, pk, ye, bk, gr, rd, vi, grpk, rdbl)
C-track properties	2 Mio.
Jacket Color	gray
Material (jacket)	PUR/PVC
Outer Ø	8.3 mm ±5%
Bend radius (fixed)	5 × outer Ø
Bend radius (moving)	10 × outer Ø
Temperature range (fixed)	-30...+80 °C
Temperature range (mobile)	-5...+60 °C
Color (jacket)	gray

Technical Data

Total current	max. 8 A
Housing	Plastic, flame retardant

General data

Temperature range	-20...+80 °C, depending on cable quality

Commercial data

country of origin	CZ
customs tariff number	85444290
EAN	4048879056748
eClass	27143423
Packaging unit	1

The information in this brochure has been compiled with the utmost care.
Liability for the correctness completeness and topicality of the information is restricted to gross negligence. Version: 03/19

The information in this brochure has been compiled with the utmost care.
Liability for the correctness completeness and topicality of the information is restricted to gross negligence. Version: 03/19

Murrelektronik GmbH | Falkenstraße 3 | 71570 Oppenweiler | Fon +49 (71 91) 47-0 | Fax +49 (71 91) 47-491000 | shop@murrelektronik.com | shop.murrelektronik.com