MURR ELEKTRONIK
stay connected

MST 1-PHASE SAFETY TRANSFORMER

P: 1600VA IN: 230/400VAC+-15VAC OUT:2x24VAC

Single-phase safety transformer
1 600 VA
Isolation class T 40/B

Link to Product

Illustration

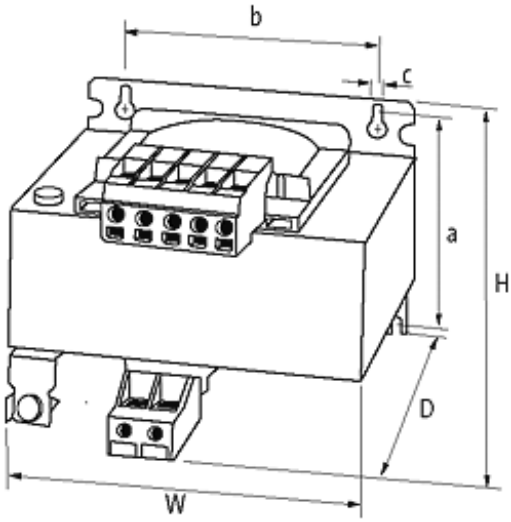

The information in this brochure has been compiled with the utmost care.
Liability for the correctness completeness and topicality of the information is restricted to gross negligence. Version: 03/19

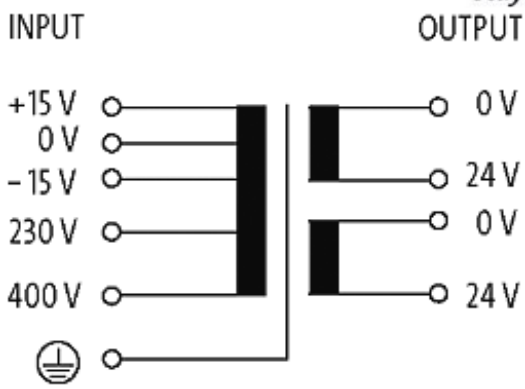

Product may differ from Image

Approvals

Input

Input voltage	230/400 ±15 V AC
Input current	7.3 A (230 V AC); 4.2 A (400 V AC)
Inrush current	135 A (230 V AC); 69 A (400 V AC)
Short-circuit current	275 A (230 V AC); 163 A (400 V AC)
Frequency	50...60 Hz

General data

Standards	EN 61558-1, EN 61558-2-4, EN 62041 category 0
Test isolation voltage	5.8 kV (prim./sec.)
Mounting method	Key-hole mounting
Dimensions H × W × D	168×174×222 mm
Fixing centers a × b × c	141.5×135×7 mm
Drill hole Ø	7×11 mm
Temperature range	-20...+40 °C, no condensation

Output

Output voltage	1 × 24, 1 × 48, 2 × 24 V AC
Output rating	1 600 VA

Commercial data

country of origin	CZ
customs tariff number	85043200
EAN	4048879366816
eClass	27031302
Packaging unit	1

The information in this brochure has been compiled with the utmost care.
Liability for the correctness completeness and topicality of the information is restricted to gross negligence. Version: 03/19