MST SINGLE-PHASE CONTROL AND ISOLATION TRANSFORMER

P:2500VA IN:690VAC OUT:230VAC

Single-phase - Control and Isolation Transformers
2 500 VA
Isolation class T 40/B

Other voltages on request.

Link to Product

Illustration

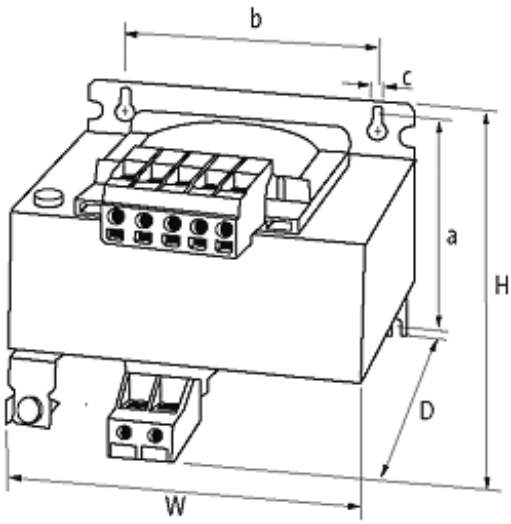

The information in this brochure has been compiled with the utmost care.
Liability for the correctness completeness and topicality of the information is restricted to gross negligence. Version: 03/19

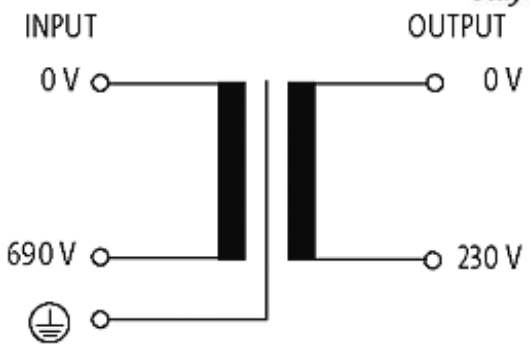

Product may differ from Image

Input	
Input voltage	690 V AC
Input current	3.9 A (690 V AC)
Inrush current	64 A (690 V AC)
Short-circuit current	127 A (690 V AC)
Frequency	50...60 Hz
General data	
Standards	EN 61558-1, EN 61558-2-4, EN 62041 category 0
Test isolation voltage	6.5 kV
Mounting method	Long-hole mounting
Dimensions H × W × D	250×197×174 mm
Fixing centers a × b × c	130×150×10 mm
Drill hole Ø	18×10 mm
Temperature range	-20...+40 °C (storage temperature -40...+80 °C)
Output	
Output voltage	230 V AC
Output rating	2 500 VA
Commercial data	
country of origin	CZ
customs tariff number	85043200
EAN	4048879283229
eClass	27031202
Packaging unit	1

The information in this brochure has been compiled with the utmost care.
Liability for the correctness completeness and topicality of the information is restricted to gross negligence. Version: 03/19