ASi Safety I/O Module, IP67, M12, 6-8SI/2SO/16I/16O

ASi Safety I/O-Module

(Figure similar)

up to 8 x 2 channel safe inputs (depending on configuration),

adjustable for
floating contacts, OSSDs or complementary switches resp. as standard inputs and standard outputs

and

up to 2 release circuits (up to 2 x electronic safe outputs) (depending on configuration)

Memory Plug

protection category IP67

Figure	Type	Inputs Safety, SIL 3, cat. 4	Outputs Safety, SIL 3, cat. 4	Safety signal inputs	Input voltage (sensor supply.) (1)	Output voltage (actuator supply.) (2)	ASi connec-tion (3)	ASi address (4)	Article no.
	IP67, 8 x M12, Safety	6-8 x 2 channels; depending on configuration	up to 2 release circuits; up to 2 x electronic safe outputs; depend-ing on configuration	floating contacts, OSSDs, comple-mentary switch	out of ASi	out of ASi	ASi profile cable	depending on configu-ration	**BW3489**
	IP67, 8 x M12, Safety	6-8 x 2 channels; depending on configuration	up to 2 release circuits; up to 2 x electronic safe outputs; depend-ing on configuration	floating contacts, OSSDs, comple-mentary switch	out of ASi	out of ASi	ASi using M12	depending on configu-ration	**BW3499**

(1) **Input voltage (sensor supply):** inputs are supplied by ASi or by AUX (auxiliary 24 V power). If supplied by ASi, inputs shall not be connected to earth or to external potential.

(2) **Output voltage (actuator supply):** outputs are supplied by ASi or by AUX (auxiliary 24 V power). If supplied by ASi, outputs shall not be connected to earth or to external potential

(3) **ASi connection:** the connection to ASi as well to AUX (auxiliary 24V power) is either made via yellow resp. black ASi profile cable with piercing technology or via M12 socket (in IP20 via clamps).

(4) **ASi address:** 1 AB address (max. 62 AB addresses/ASi network), 2 AB addresses (max. 31 modules with 2 AB addresses), Single addresses (max. 31 Single addresses/ASi network), mixed use allowed.
For modules with two ASi nodes the second ASi node is turned off as long as the first ASi node is addressed to address "0".
Upon request, ASi nodes are available with specific ASi address profiles.

ASi Safety I/O Module, IP67, M12, 6-8SI/2SO/16I/16O

Article no.	BW3499	BW3489
Connection		
ASi/AUX connection	M12	profile cable and piercing
Periphery connection	M12	
Length of connector cable	unlimited (1)	
ASi		
Profile	safe ASi input nodes: S-7.B.0 (ID1=F) and S-7.B.1 (ID1=F) ASi diagnostic nodes: S-7.A.E (ID1=5) 4I/4O ASi nodes: S-7.E (ID1=F) ASi configuration node: S-7.A.5 (ID1=7)	
Addresses	depending on configuration	
Required Master profile	≥M4	
Since ASi specification	3.0	
Operating voltage	30 V_{DC} (18 ... 31,6 V)	
Max. current consumption	420 mA	
Max. current consumption without sensor/actuator supply	100 mA	
Input		
Number	6-8 x 2 channels safe inputs (SIL3, cat. 4, PLe) for floating contacts, OSSDs or complementary switches (2)	
	up to 16 standard inputs (2)	
Switching current	15 mA (T = 100µs), continuously 4 mA at 24 V	
Power supply	out of ASi	
Max. current for OSSD	Σ (In/Out)<320 mA	
OSSD test pulses	0 ... 50 Hz	
OSSD test pulse width	0 ... 1 ms	
input level	10 mA, R < 150 Ω	
Output		
Number	up to 2 release circuits; up to 2 x electronic safe outputs (2)	
	up to 16 standard outputs (2)	
Power supply	out of ASi	
Max. output current	Σ (In/Out)<320 mA	
Test pulse	if output is on: minimum interval between 2 test pulses: 250 ms, pulse width: 1 ms	
Display		
LEDs S11/S12 ... S81/S82 (yellow)	state of safe input channels S11/S12 ... S81/S82 (2)	
LED SO1, SO2 (yellow)	state of safe outputs SO1, SO2 (2)	
LED ASI (green)	on: ASi voltage on flashing: ASi voltage on, but peripheral fault (3) or address 0 off: no ASi voltage	
LED FLT/FAULT (red)	on: ASi address 0 or node off line flashing: peripheral fault (3) off: node on line	
LED MP (green / yellow / red)	off: no memory plug plugged in or memory plug defect green: memory plug plugged in and recognized yellow flashing: copying configuration from memory plug to unconfigurated module or from module to empty memory plug red: configuration on memory plug and device different (3) or configuration on memory plug incompatible with the device	

Article no.	BW3499	BW3489
Environment		
Applied standards	EN 61000-2 EN 61000-3 EN 61131-2 EN 62061 EN ISO 13849-1 EN 60529	
Can be used in passively safe paths up to SIL3/PLe	yes (4)	
Operating altitude	max. 2000 m	
Ambient operating temperature	0 °C ... +55 °C	
Storage temperature	-25 °C ... +85 °C	
Housing	plastic, for screw mounting	
Pollution Degree	2	
Protection category	IP67 (5)	
Tolerable loading referring to humidity	according to EN 61131-2	
Max. tolerable shock load	30*g*, 11 ms, acc. EN 61131-2	
Max. tolerable vibration stress	5 ... 8 Hz 50 mm_{pp}/8 ... 500 Hz 6*g*, acc. EN 61131-2	
Voltage of insulation	≥500 V	
Weight	225 g	
Dimension (W / H / D in mm)	60 / 151 / 46	

(1) loop resistance ≤150 Ω

(2) siehe “Configuration options of connections of BW3489, BW3499”

(3) See table “Peripheral fault indication”

(4) The module is suitable for use in passively safe paths as it has no connection to an AUX potential.

(5) IP67 can only be achieved if all open M12 sockets are sealed with suitable protection caps (see accessories).

Article no.	Peripheral fault indication			
	Cross connection	Overload output	AUX voltage missing	configuration on memory plug and device different
BW3489	●	●	–	●
BW3499	●	●	–	●

UL-specifications (UL 61010) BW3489, BW3499	
External protection	An isolated source with a secondary open circuit voltage of ≤30 V_{DC} with a 3 A maximum over current protection. Over current protection is not required when a Class 2 source is employed.
In general	UL mark does not provide UL certification for any functional safety rating or aspects of the above devices.

Configuration options of connections of BW3489, BW3499

Connection	Safe electronic output	2 channels safe input			2 standard inputs / 2 standard output
		for floating contacts	for complementary switches	for OSSDs	
S11/S12	–	●	●	●	●/● (1)
S21/S22	–	●	●	●	●/●
S31/S32	–	●	●	●	●/●
S41/S42	–	●	●	●	●/●
S51/S52	–	●	●	●	●/●
S61/S62	–	●	●	●	●/●
SO1 (2); S71/S72	●	●	●	●	●/●
SO2 (2); S81/S82	●	●	●	●	●/●

(1) The safe output of node 1 can be configured as a standard output by setting parameter P0=0.

(2) If outputs are configured as inputs, the input current has to be limited by an external element at ≤100 mA

Pin assignment

Signal name	Explanation
Sx1/Sx2	safe input x, configurable for floating contacts or OSSDs reps. as standard inputs (standard)
Ix	standard input x
Ox	standard output x
SOx	safe electronic output x
T1, T2	clokc output
$24V_{ext\ out}$	power supply, out of external voltage, positive pole (AUX, actuator supply)
$0V_{ext\ out}$	power supply, out of external voltage, negative pole (AUX, actuator supply)
$24V_{out\ of\ ASi}$	power supply, out of ASi, positive pole (sensor supply)
$0V_{out\ of\ AS-}$	power supply, out of ASi, negative pole (sensor supply)
ASi+, ASi-	connection to ASi bus
n.c. (not connected)	not connected

ASi Safety I/O Module, IP67, M12, 6-8SI/2SO/16I/16O

Connections

Article no.	M12 connect.	Marking	Configuration	Pin1	Pin2	Pin3	Pin4	Pin5
BW3489	**X1**	S11/S12	standard.in/ diag.out	O2/ 24 $V_{out\ of\ ASi}$	I2	0 V out of ASi	I1	O1
			float. cont.	T2	S12	n.c.	S11	T1
			OSSD	24 $V_{out\ of\ ASi}$	S12	0 V out of ASi	S11	Reset
	X2	S21/S22	standard.in/ diag.out	O4/ 24 $V_{out\ of\ ASi}$	I4	0 V out of ASi	I3	O3
			float. cont.	T2	S22	n.c.	S21	T1
			OSSD	24 $V_{out\ of\ ASi}$	S22	0 V out of ASi	S21	Reset
	X3	S31/S32	standard.in/ diag.out	O6/ 24 $V_{out\ of\ ASi}$	I6	0 V out of ASi	I5	O5
			float. cont.	T2	S32	n.c.	S31	T1
			OSSD	24 $V_{out\ of\ ASi}$	S32	0 V out of ASi	S31	Reset
	X4	S41/S42	standard.in/ diag.out	O8/ 24 $V_{out\ of\ ASi}$	I8	0 V out of ASi	I7	O7
			float. cont.	T2	S42	n.c.	S41	T1
			OSSD	24 $V_{out\ of\ ASi}$	S42	0 V out of ASi	S41	Reset
	X5	S51/S52	standard.in/ diag.out	O10/ 24 $V_{out\ of\ ASi}$	I10	0 V out of ASi	I9	O9
			float. cont.	T2	S52	n.c.	S51	T1
			OSSD	24 $V_{out\ of\ ASi}$	S52	0 V out of ASi	S51	Reset
	X6	S61/S62	standard.in/ diag.out	O12/ 24 $V_{out\ of\ ASi}$	I12	0 V out of ASi	I11	O11
			float. cont.	T2	S62	n.c.	S61	T1
			OSSD	24 $V_{out\ of\ ASi}$	S62	0 V out of ASi	S61	Reset
	X7	SO1	safety out	n.c.	SO1-	0 V out of ASi	SO1+	n.c.
			standard.in/ diag.out	O14/ 24 $V_{out\ of\ ASi}$	I14	0 V out of ASi	I13	O13
			float. cont.	T2	S72	n.c.	S71	T1
			OSSD	24 $V_{out\ of\ ASi}$	S72	0 V out of ASi	S71	Reset
	X8	SO2	safety out	n.c.	SO2-	0 V out of ASi	SO2+	n.c.
			standard.in/ diag.out	O16/ 24 $V_{out\ of\ ASi}$	I16	0 V out of ASi	I15	O15
			float. cont.	T2	S82	n.c.	S81	T1
			OSSD	24 $V_{out\ of\ ASi}$	S82	0 V out of ASi	S81	Reset
	ADDR	connection for ASi-3 addressing plug (protection cap)						
	MP	memory plug (protection cap)						

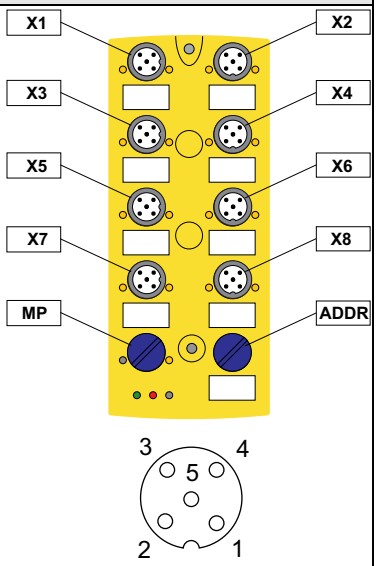

ASi Safety I/O Module, IP67, M12, 6-8SI/2SO/16I/16O

Connections

Article no.	M12 connect.	Marking	Configuration	Pin1	Pin2	Pin3	Pin4	Pin5
BW3499	**X1**	S11/S12	standard.in/ diag.out	O2/ 24 $V_{out\ of\ ASi}$	I2	0 V out of ASi	I1	O1
			float. cont.	T2	S12	n.c.	S11	T1
			OSSD	24 $V_{out\ of\ ASi}$	S12	0 V out of ASi	S11	Reset
	X2	S21/S22	standard.in/ diag.out	O4/ 24 $V_{out\ of\ ASi}$	I4	0 V out of ASi	I3	O3
			float. cont.	T2	S22	n.c.	S21	T1
			OSSD	24 $V_{out\ of\ ASi}$	S22	0 V out of ASi	S21	Reset
	X3	S31/S32	standard.in/ diag.out	O6/ 24 $V_{out\ of\ ASi}$	I6	0 V out of ASi	I5	O5
			float. cont.	T2	S32	n.c.	S31	T1
			OSSD	24 $V_{out\ of\ ASi}$	S32	0 V out of ASi	S31	Reset
	X4	S41/S42	standard.in/ diag.out	O8/ 24 $V_{out\ of\ ASi}$	I8	0 V out of ASi	I7	O7
			float. cont.	T2	S42	n.c.	S41	T1
			OSSD	24 $V_{out\ of\ ASi}$	S42	0 V out of ASi	S41	Reset
	X5	S51/S52	standard.in/ diag.out	O10/ 24 $V_{out\ of\ ASi}$	I10	0 V out of ASi	I9	O9
			float. cont.	T2	S52	n.c.	S51	T1
			OSSD	24 $V_{out\ of\ ASi}$	S52	0 V out of ASi	S51	Reset
	X6	S61/S62	standard.in/ diag.out	O12/ 24 $V_{out\ of\ ASi}$	I12	0 V out of ASi	I11	O11
			float. cont.	T2	S62	n.c.	S61	T1
			OSSD	24 $V_{out\ of\ ASi}$	S62	0 V out of ASi	S61	Reset
	X7	SO1	safety out	n.c.	SO1-	0 V out of ASi	SO1+	n.c.
			standard.in/ diag.out	O14/ 24 $V_{out\ of\ ASi}$	I14	0 V out of ASi	I13	O13
			float. cont.	T2	S72	n.c.	S71	T1
			OSSD	24 $V_{out\ of\ ASi}$	S72	0 V out of ASi	S71	Reset
	X8	SO2	safety out	n.c.	SO2-	0 V out of ASi	SO2+	n.c.
			standard.in/ diag.out	O16/ 24 $V_{out\ of\ ASi}$	I16	0 V out of ASi	I15	O15
			float. cont.	T2	S82	n.c.	S81	T1
			OSSD	24 $V_{out\ of\ ASi}$	S82	0 V out of ASi	S81	Reset
	X9	ASi		ASi+	n.c.	ASi-	n.c.	–
	MP	memory plug (protection cap)						

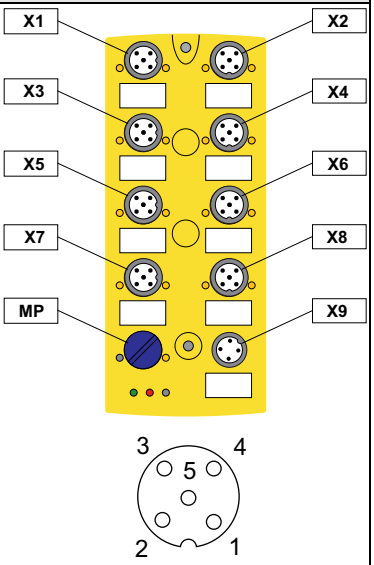

Programming instructions (bit assignment of standard I/O nodes)

	ASi bit assignment			
Bit	D3	D2	D1	D0
	input			
Node 1	I4	I3	I2	I1
Node 2	I8	I7	I6	I5
Node 3	I12	I11	I10	I9
Node 4	I16	I15	I14	I13
	output			
Node 1	O4	O3	if P0=1: X8 output: SO2 if P0=0: X1 output: O2	if P0=1: X7 output: SO1 if P0=0: X1 output: O1
Node 2	O8	O7	O6	O5
Node 3	O12	O11	O10	O9
Node 4	O16	O15	O14	O13
	parameter bit			
	P3	P2	P1	P0
Node 1	free	free	free	P0=1: SOx can be switch off via the output bit. O2 = +24V; O1 = 0V P0=0: no influence on SOx
Node 2	free	free	free	free
Node 3	free	free	free	free
Node 4	free	free	free	free

Programming instructions (bit assignment of ASi safety input nodes 1…8)

	ASi bit assignment			
Bit	D3	D2	D1	D0
	input			
safety input nodes	Sx2		Sx1	
	output			
	free	if OSSD: reset (Pin 5)	free	free
	parameter bit			
	P3	P2	P1	P0
	free	free	free	free

Programming instructions (bit assignment of ASi diagnostic nodes 1 and 2)

	ASi bit assignment			
Bit	D3	D2	D1	D0
	input			
diagnostic node	I3	diagnsotics (see table device colors)		
	output			
	free	free	free	O0
	parameter bit			
	P3	P2	P1	P0
	free	P2=1: feedback input Ix (x=1, 3) at I3 P2=0: feedback of release conditions at I3	P1=1: not used P1=0: if O0=0, the safe output SOx (n=1, 2) will be switched off, regardless of the release	free

Release conditions

				ASi Standard I/O nodes		
				ASi node 1		
				Parameter P0 = 0	Parameter P0 = 1	
					Bit D_{x-1} = 0	Bit D_{x-1} = 1
ASi diagnostic nodes	ASi node 1 and 2	Parameter P1 = 1		SOx = release	SOx = off	SOx = release
		Parameter P1 = 0	Bit O0 = 1	SOx = release	SOx = off	SOx = release
			Bit O0 = 0	SOx = off	SOx = off	SOx = off

Diagnostics (device colors)

Value	Color	Description	State change	LED SOx
0	green	output on	–	on
1	green flashing	–	–	–
2	yellow	restart inhibit	auxiliary signal 2	1 Hz
3	yellow flashing	–	–	–
4	red	output off	–	off
5	red flashing	waiting for "reset of error condition" or AUX is missing	auxiliary signal 1 or connect AUX	8 Hz
6	gray	internal error, such as "fatal error"	only via "Power ON" on device	all LEDs flashing
7	green/yellow	output released, but not switched on	switching-on by setting of O0	off

2-channel safe inputs (S11/S12 ... S81/S82) / standard inputs (I1 ... I16)

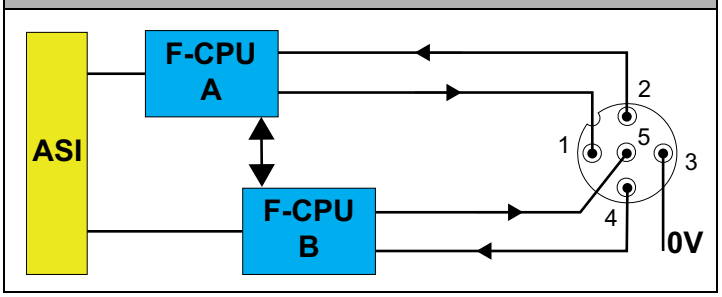

Standard inputs (I1 ... I16) (1)

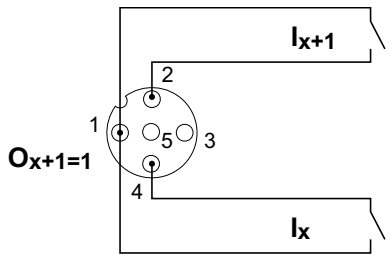

(1) Ox+1 must remain on so that 24V is present on Pin 1.

Standard outputs (O1 ... O16)

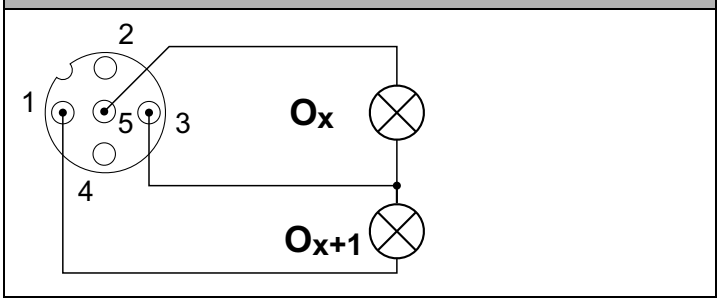

Safe electronic outputs (SO1, SO2)

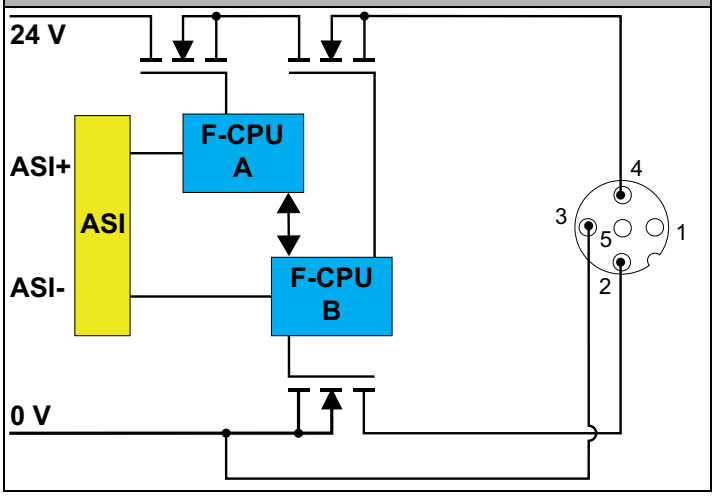

LED status display

LED	State	Signal / Description
AUX (green)		no 24 V_{DC} AUX
		24 V_{DC} AUX present
ASI (green)		no ASi voltage
	1 Hz	ASi voltage present, but at least one ASi node is addressed „0“ or peripheral fault
		ASi voltage present
FLT (red)		ASi communication OK (at least one ASi node on line)
	1 Hz	at least one ASi node with peripheral fault
		no data exchange (with at least one correctly addressed ASi node)
MP (green / yellow / red)		no memory plug plugged in or memory plug defect
	1 Hz	copying configuration from memory plug to unconfigurated module or from module to empty memory plug
		memory plug plugged in and recognized
		configuration on memory plug and device different or configuration incompatible with the device, user intervention is required.

LED	State	Signal / Description
S11/S12 ... S81/S82 (yellow)		safety input channel is switched off
	1 Hz	cross-connection
	8 Hz	internal error or double address
		safety input channel is switched on
SO1, SO2 (yellow)		safety output is switched off
	1 Hz	restart block, waiting for the start signal to switch on the safety output again
	8 Hz	unlockable error state; waiting for "reset of error condition signal", after receiving the signal the device turns into normal operation
		safety output is switched on
LED on	LED flashing	LED off

⚠	In case all LEDs are blinking simultaneously in fast rhythm a fatal error has been detected. This message is reset by a short disconnection of the power supply (Power ON Reset).

Accessories:

- **Bihl-Wiedemann Suite - Safety Software for Configuration, Diagnostics and Programming (art. no. BW2916)**
- **ASi substructure module (CNOMO) for 8 channel module in 60 mm housing (art. no. BW2351)**
- **Memory Plug, memory capacity 32 kByte (art. no. BW3241)**
- **Universal protection cap ASi-5/ASi-3 for M12 sockets, IP67 (art. no. BW4056)**
- **Memory plug cover (art. no. BW3155)**
- **Sealing profile IP67 (IDC plug), 60 mm (art. no. BW3282)**
- **ASi-5/ASi-3 Address Programming Device (art. no. BW4708)**