ITEM 094800 CEM-A-LE05K-S2

Description	Technical data	Accessories	Downloads

Features

- Read head with guard locking without guard lock monitoring
- Locking force 650 N
- With remanence
- Up to category 4 according to EN ISO 13849-1
- Two safety screws M5x16 included

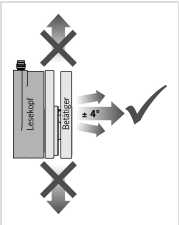

Approach direction

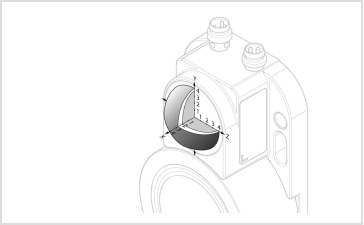

› Typical operating distance

Note assured switch-off distance s_{ar} = 20 mm for internal component failure.

Safety outputs are reliably switched off.

Approvals

Mechanical values and environment

Material	
Read head	Plastic (PPS)
Solenoid	Steel, nickel-plated
Housing material	Die-cast aluminum
Weight	
Net	0,3 kg
Ambient temperature	-25 ... 50 °C
Degree of protection	IP67
Mechanical life	
In case of use as door stop, and 1 Joule impact energy	1×10^6
Installation position	Any
Switching frequency	
Read head	See operating instructions for the related evaluation unit [1]
Solenoid	max.1 Hz
Connection	
X1, solenoid (yellow LED integrated in the plug)	Plug connector M8x1, 4-pin male (with snap-action / screw terminal)
X3, read head	Plug connector M8x1, 3-pin male (with snap-action / screw terminal)
Cable length	max.25 m
Guard locking principle	Open-circuit current principle
Locking force F	
(Not monitored, in axial direction) at $U_{CM} \geq 24V$	650 N
Adhesive force	
due to remanence	10 -25% ... +25% N

Electrical connection ratings

Operating voltage DC	
U_{CM}	24 V DC -15% ... 10%
Current consumption	
U_B	100 mA

Power consumption	2,5 W
Solenoid duty cycle	100 %

Operating distance

Switching hysteresis With center offset m=0	0,7 mm [2]
Assured switch-off distance S_{ar}	max.20 mm [3]
Assured operating distance S_{ao} With center offset m=0	min.2 mm [4]
Center offset	-2,5 ... +2,5 mm

[1, 2, 3, 4] In conjunction with evaluation unit CES-A-...B or CES-AZ-...B

Dimension drawing

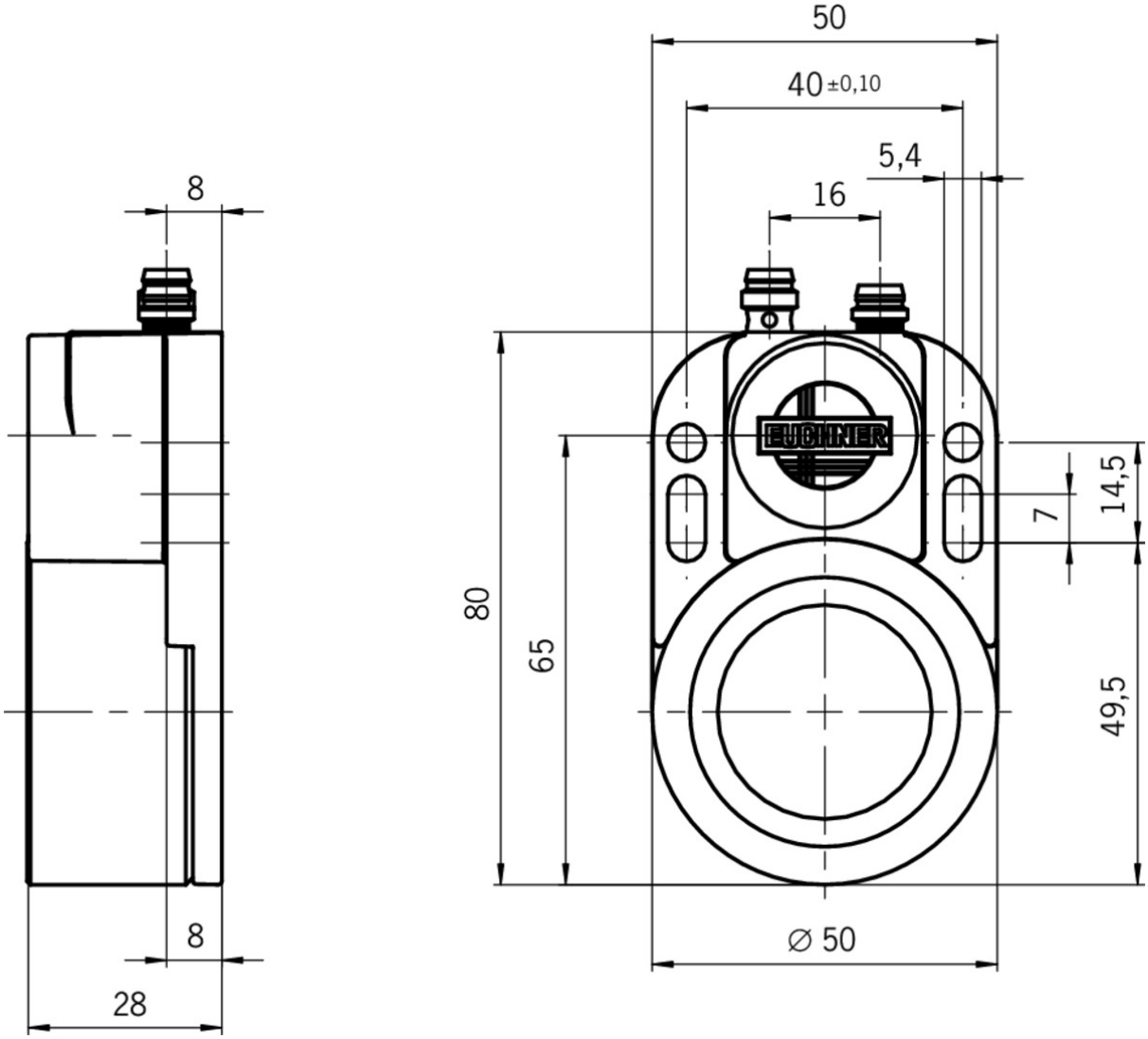

Circuit diagram connection solenoid operating voltage plug S1. A free-wheeling diode is already integrated into each CEM.

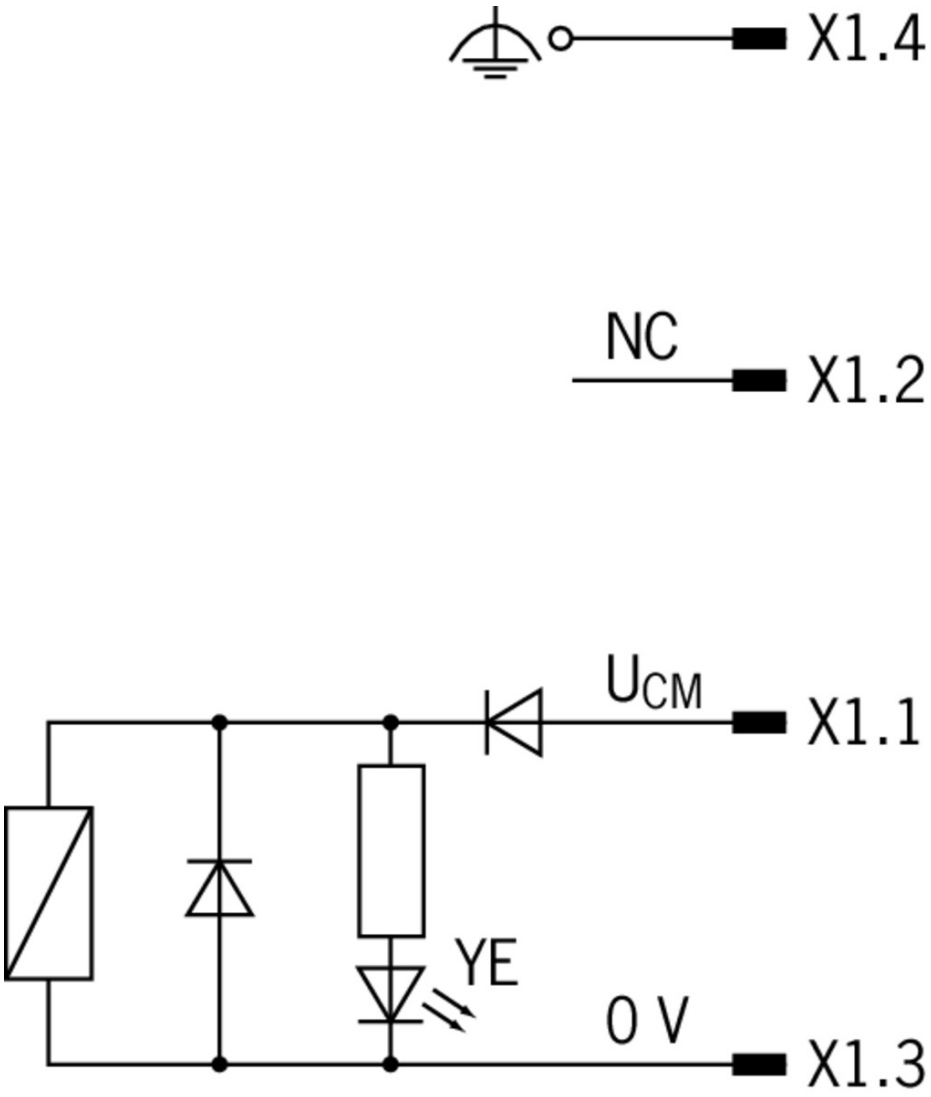

Wiring diagram

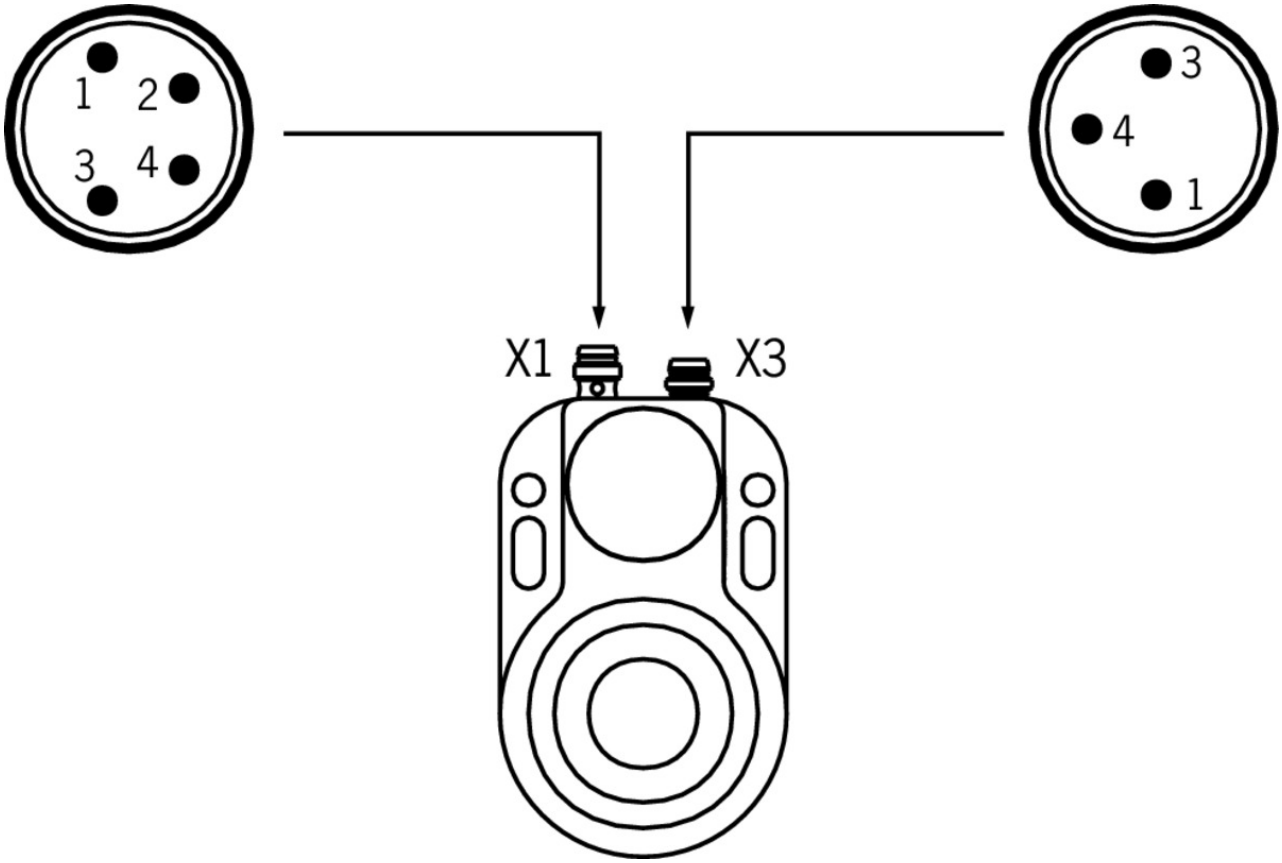

Legende

Solenoid operating voltage

X1.1 U_{CM}/DC 24 V

X1.2 NC

X1.3 0 V/GND

X1.4 Function earth

CES evaluation unit

X3.1 Data line

X3.3 Data line

X3.4 SH (screen)

Connection material

Connection cable with plug connector M8, 3-pin, 10m

084763 C-M08F03-02X025PU10,0-ES-084763

Features

- M8 female plug, 3-pin
- Straight plug connector
- PUR cable
- Cable length 10 m

- With flying lead

077767 C-M08F03-02X025PV10,0-ES-077767

Features

- M8 female plug, 3-pin
- Straight plug connector
- PVC cable
- Cable length 10 m
- With flying lead

Connection cable with plug connector M8, 3-pin, 15m

084764 C-M08F03-02X025PU15,0-ES-084764

Features

- M8 female plug, 3-pin
- Straight plug connector
- PUR cable
- Cable length 15 m
- With flying lead

Connection cable with plug connector M8, 3-pin, 3m

077935 C-M08F03-02X025PV03,0-ES-077935

Features

- M8 female plug, 3-pin
- Straight plug connector
- PVC cable
- Cable length 3 m
- With flying lead

Connection cable with plug connector M8, 5m

077793 C-M08F03-02X025PV05,0-ES-077793

Features

- M8 female plug, 3-pin
- Straight plug connector
- PVC cable
- Cable length 5 m
- With flying lead

Connection cable with plug connector M8, 3-pin, 20m

077716 C-M08F03-02X025PV20,0-ES-077716

Features

- M8 female plug, 3-pin
- Straight plug connector
- PVC cable
- Cable length 20 m
- With flying lead

084765 C-M08F03-02X025PU20,0-ES-084765

Features

- M8 female plug, 3-pin
- Straight plug connector
- PUR cable
- Cable length 20 m
- With flying lead

Connection cable with plug connector M8, 3-pin, 25m

077717 C-M08F03-02X025PV25,0-ES-077717

Features

- M8 female plug, 3-pin
- Straight plug connector
- PVC cable
- Cable length 25 m
- With flying lead

084766 C-M08F03-02X025PU25,0-ES-084766

Features

- M8 female plug, 3-pin
- Straight plug connector
- PUR cable
- Cable length 25 m
- With flying lead

Connection cable with plug connector M8, 3-pin, 5m

084762 C-M08F03-02X025PU05,0-ES-084762

Features

- M8 female plug, 3-pin
- Straight plug connector
- PUR cable
- Cable length 5 m
- With flying lead

Connection cable with plug connector M8, 4-pin, 25m

095035 C-M08F04-04X025PV25,0-ES-095035

Features

- M8 female plug, 4-pin
- Straight plug connector
- PVC cable
- Cable length 25 m
- With flying lead

Connection cable with angled plug connector M8, 4-pin, 10m

084703 C-M08F04-04X025PV10,0-ES-084703

Features

- M8 female plug, 4-pin
- Angled plug connector
- PVC cable

- Cable length 10 m
- With flying lead

Connection cable with plug connector M8, 4-pin, 15m

088815 C-M08F04-04X025PV15,0-ES-088815

Features

- M8 female plug, 4-pin
- Straight plug connector
- PVC cable
- Cable length 15 m
- With flying lead

Connection cable with plug connector M8, 4-pin, 10m

088814 C-M08F04-04X025PV10,0-ES-088814

Features

- M8 female plug, 4-pin
- Straight plug connector
- PVC cable
- Cable length 10 m
- With flying lead

116050 C-M08F04-04X034PU10,0-ES-116050

Features

- M8 female plug, 4-pin
- Straight plug connector
- PUR cable
- Cable length 10 m
- With flying lead

Connection cable with angled plug connector M8, 3-pin, 10m

098590 C-M08F03-02X025PU10,0-ES-098590

Features

- M8 female plug, 3-pin
- Angled plug connector
- PUR cable
- Cable length 10 m
- With flying lead

084701 C-M08F03-02X025PV10,0-ES-084701

Features

- M8 female plug, 3-pin
- Angled plug connector
- PVC cable
- Cable length 10 m
- With flying lead

Connection cable with plug connector M8, 4-pin, 5m

088813 C-M08F04-04X025PV05,0-ES-088813

Features

- M8 female plug, 4-pin
- Straight plug connector
- PVC cable
- Cable length 5 m
- With flying lead

116049 C-M08F04-04X034PU05,0-ES-116049

Features

- M8 female plug, 4-pin
- Straight plug connector
- PUR cable
- Cable length 5 m
- With flying lead

Connection cable with angled plug connector M8, 3-pin, 25m, angled

099998 C-M08F03-02X025PV25,0-ES-099998

Features

- M8 female plug, 3-pin
- Angled plug connector
- PVC cable
- Cable length 25 m
- With flying lead

Connection cable with plug connector M8, 4-pin, 20m

116051 C-M08F04-04X034PU20,0-ES-116051

Features

- M8 female plug, 4-pin
- Straight plug connector
- PUR cable
- Cable length 20 m
- With flying lead

Actuator

Actuator CEM-A-BE05

094805 CEM-A-BE05

Features

- Locking force 500 N
- Two safety screws M5x16 included

Mounting accessories

Safety screws for actuators, M5 x 16

073456 M5X16/V100

Features

- Safety screws M5 x 16
- Packaging unit 100 pieces

Mounting plate EMP-B-... for actuator CEM-A-BE05...

100110 EMP-B-CEM05

Features

- For actuator CEM-A-BE05...
- Material stainless steel

Mounting plate EMP-L-... for read head CEM-A-LE05...

099425 EMP-L-CEM05

Features

- For read head CEM-A-LE05...
- Material stainless steel

Bolt

Bolt CEM-A and CEM-C

097955 RIEGEL CEM-A

Features

- In combination with read head CEM-A-LE05...
- Steel bolt
- For doors hinged on the right
- Can be locked in open position with padlocks

097957 RIEGEL CEM-C

Features

- In combination with read head CEM-A-LE05...
- Steel bolt
- For doors hinged on the left
- Can be locked in open position with padlocks

Function expansion

Mounting magnet CEM with guard locking

109755 CEM-A-ME05K-S1

Features

- Electromagnet for locking access doors
- Locking force 650 N
- With remanence
- No guard lock monitoring, no monitoring of the door position
- Connection using an M8 plug connector

Instructions

Betriebsanleitung Leseköpfe/Betätiger CEM-A-...

	Doc. no.	Version	Language	Download
Betriebsanleitung Leseköpfe/Betätiger CEM-A-... Operating Instructions Read Heads/Actuators CEM-A-... Manual de instrucciones Cabeza de lectura/actuador CEM-A-... Mode d'emploi Têtes de lecture/actionneurs CEM-A-... Istruzioni di impiego Testine di lettura/azionatori CEM-A-...	2114342	07-04/18		1.3 MB

Catalogs

Transpondercodierte Sicherheitssysteme mit externer Auswertung Transponder-coded safety systems with external evaluation Sistemas de seguridad con codificación por transponder y evaluación externa Systèmes de sécurité à codage par transpondeur avec analyse externe

	Doc. no.	Version	Language	Download
Transpondercodierte Sicherheitssysteme mit externer Auswertung	127596	02-01/18		3.1 MB
Systèmes de sécurité à codage par transpondeur avec analyse externe	137968	02-01/18		3.0 MB
Sistemas de seguridad con codificación por transponder y evaluación externa	139969	02-01/18		3.0 MB
Transponder-coded safety systems with external evaluation	127597	02-01/18		3.0 MB

Declaration of conformity

EU-Konformitätserklärung

	Doc. no.	Version	Language	Download
EU-Konformitätserklärung Declaración UE de conformidad Déclaration UE de conformité Dichiarazione di conformità EU declaration of conformity	2077154	34-01/17		0.5 MB

CAD data

CAD data for this item on TraceParts