ITEM 049102 TZ2RE024SR6

Features

- Auxiliary release on the front
- Two LED indicators, red and green
- Plug connector SR6
- Actuating head fitted right

Approach direction

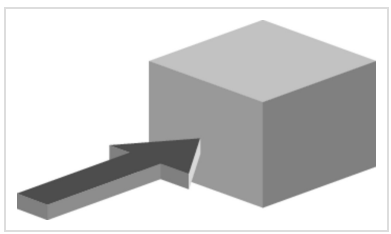

Figure
Horizontal
Can be adjusted in 90° steps

Solenoid operating voltage and LED function display

- 24 V AC/DC -15%, +10%

Guard locking type

TZ2 Open-circuit current principle, guard locking by applying voltage to the solenoid. Release by spring force.

Switching element

SK For monitoring the door/actuator position
ÜK For monitoring the guard locking (built-in solenoid)
528H Slow-action switching contact 1 NC⊖ + 1 NO

Auxiliary release

Is used for releasing the guard locking with the aid of a tool. Sealing can be fitted to protect against tampering. Lead seal kit and tool included (already pre-assembled on versions with plug connectors).

Approvals

Mechanical values and environment

Housing material	Anodized die-cast alloy
Weight	
Net	1,2 kg
Ambient temperature	-25 ... 80 °C
Degree of protection	IP65
Mechanical life	1 x 10^6
Contact material	Silver alloy, gold flashed
Switching principle	Slow-action switching contact
Installation position	Any
Number of door position positively driven contacts	1
Number of door position NO contacts	1
Number of guard lock monitoring positively driven contacts	1
Number of guard lock monitoring NO contacts	1
Connection	
1 x	Plug connector SR6 [1]
Approach speed	max.20 m/min
Actuation frequency	1200 1/h
Guard locking principle	Open-circuit current principle
Locking force F_{max}	2000 N
Locking force F_{Zh}	1500 N

Retention force	10 N
Extraction force	30 N
Actuating force	35 N
Insertion depth	min.52 mm
Cover lid	Black

Electrical connection ratings

Rated thermal current I_{th}	4 A [2]
Utilization category according to EN 60947-5-1	
AC-15	4A 230V [3]
DC-13	4A 24V [4]
Solenoid operating voltage	
AC/DC	24 V -15% ... +10%
Short circuit protection according to IEC 60269-1	
(Fuse)	4A gG [5]
Rated insulation voltage U_i	250 V
Rated impulse withstand voltage U_{imp}	2,5 kV
Switching voltage	
Min. at 10mA	12 V
Switching current	
Min. at 24V	1 mA
Power consumption	10 W
Solenoid duty cycle	100 %
LED indicator	Operating voltage corresponds to the solenoid voltage [6]

Reliability values acc. to EN ISO 13849-1

	Monitoring of guard locking and the safety guard position
$B10_D$	3×10^6

---

in combination withActuator BETAETIGER-Z-G

Mechanical values and environment

Overtravel	4 mm

in combination withActuator BETAETIGER-Z-GN

Mechanical values and environment

Overtravel	16 mm

[1] 6-pin + PE

[2, 3, 4] >70°C => 2A

[5] > 70°C => 2A gG

[6] 2 LEDs; green, red

Dimension drawing

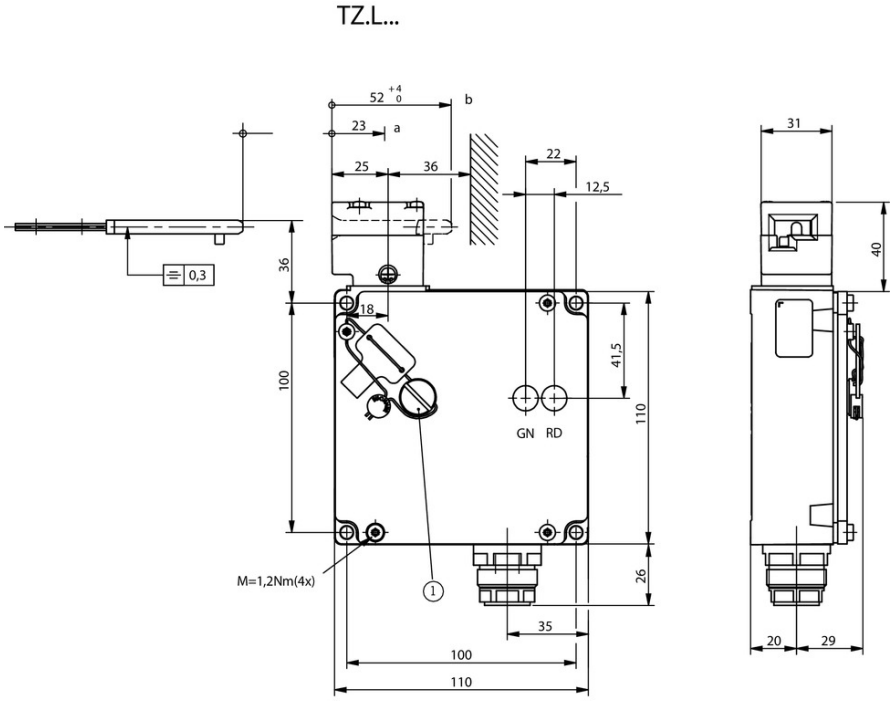

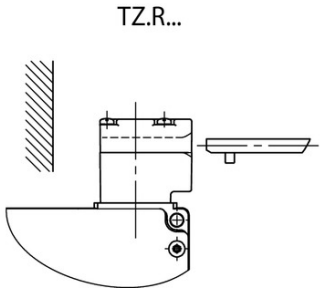

Legende

1 Auxiliary release

SK:528H/ÜK:528HSR6

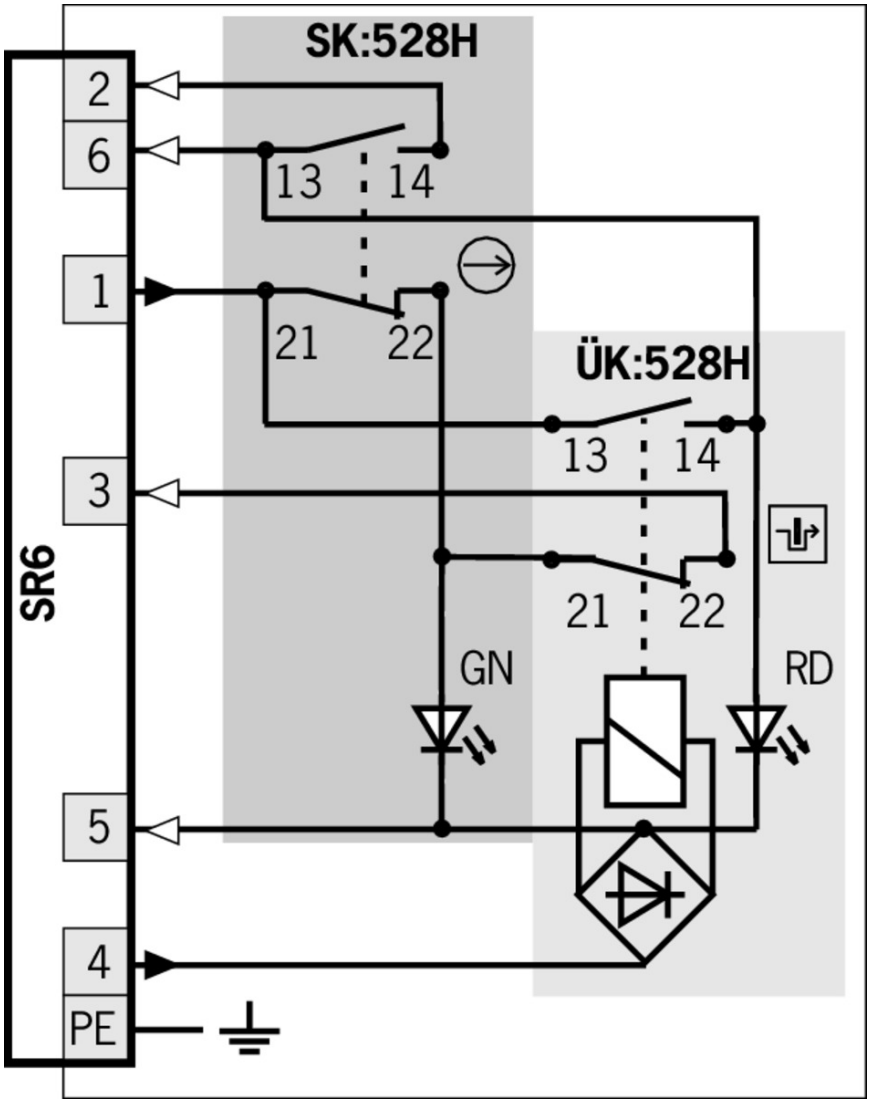

Legende

Solenoid monitoring

Door monitoring

Switching functions

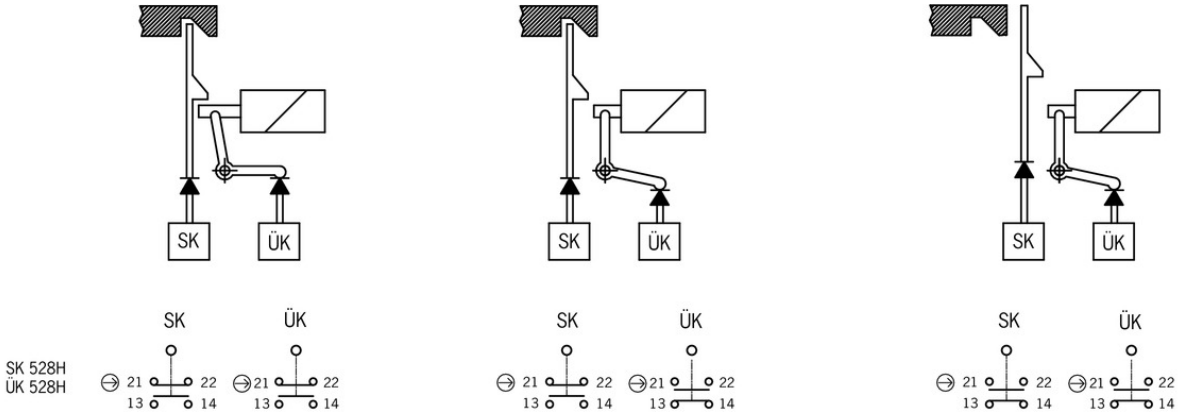

Connection material

Connection cable with plug connector SR6, 5m, angled

077638 C-R22F07-07X1,0PU05,0-MA-077638

Features

- Female plug SR6, 6-pin + PE
- Angled plug connector
- PUR cable
- Cable length 5 m
- With flying lead

Connection cable with plug connector SR6, 10m, angled

077639 C-R22F07-07X1,0PU10,0-MA-077639

Features

- Female plug SR6, 6-pin + PE
- Angled plug connector
- PUR cable
- Cable length 10 m
- With flying lead

Plug connector SR6

013178 SR6K

Features

- Coding for plug connector SR6
- Coding shells

087180 SR6AM2-M20

Features

- Crimp contacts
- Male socket

024999 SR6WFPG11R

Features

- Socket crimp contacts
- 6-pin+PE
- Contact carrier can be adjusted in 7 outlet directions

013176 SR6EF

Features

- Crimp contacts
- Coding shells

Connection cable with plug connector SR6, 15m, angled

077640 C-R22F07-07X1,0PU15,0-MA-077640

Features

- Female plug SR6, 6-pin + PE
- Angled plug connector
- PUR cable
- Cable length 15 m
- With flying lead

Connection cable with plug connector SR6, 10m

077633 C-M26F07-07X1,0PU10,0-MA-077633

Features

- Female plug SR6, 6-pin + PE
- Straight plug connector
- PUR cable
- Cable length 10 m
- With flying lead

Connection cable with plug connector SR6, 15m

077634 C-M26F07-07X1,0PU15,0-MA-077634

Features

- Female plug SR6, 6-pin + PE
- Straight plug connector
- PUR cable
- Cable length 15 m
- With flying lead

Connection cable with plug connector SR6, 20m

098128 C-M26F07-07X1,0PU20,0-MA-098128

Features

- Female plug SR6, 6-pin + PE
- Straight plug connector
- PUR cable
- Cable length 20 m
- With flying lead

Connection cable with plug connector SR6, 5m

077632 C-M26F07-07X1,0PU05,0-MA-077632

Features

- Female plug SR6, 6-pin + PE
- Straight plug connector
- PUR cable
- Cable length 5 m
- With flying lead

Spare parts

Lead seal kit

048257 PLOMBENSATZ TZ

Bolt

Bolt BTC-TZ00... without escape release for safety switch TZ

106278 BTC-TZ00-A-TH-00-X

Features

- Aluminum bolt
- For doors hinged on the right
- Can be locked in open position with padlocks
- Actuator included

Bolt TZ-A... for safety switches TZ

057736 RIEGEL TZ-A

Features

- Steel bolt
- For doors hinged on the right
- Can be locked in open position with padlocks
- Actuator and switch bracket included

079798 RIEGEL TZ-A-NIRO

Features

- Stainless steel bolt
- For doors hinged on the right
- Can be locked in open position with padlocks
- Actuator and switch bracket included

096057 RIEGEL TZ-A-NIRO-C2101

Features

- Stainless steel bolt
- For doors hinged on the right
- Can be locked in open position with padlocks
- Actuator and switch bracket included

117193 RIEGEL TZ-A-NIRO-C2392

Features

- Stainless steel bolt
- For doors hinged on the right
- Can be locked in open position with padlocks
- Actuator and switch bracket included

Bolts NZ/TZ-S1 and NZ/TZ-S2 for safety switches NZ.VZ, NZ.VZ.VS and TZ

028357 RIEGEL NZ/TZ-S1

Features

- Aluminum bolt
- For doors hinged on the left or right. Cone grip bottom.
- Spring catch in open position
- Can be locked in open position with padlocks
- Actuator included

028359 RIEGEL NZ/TZ-S2

Features

- Aluminum bolt
- For doors hinged on the left or right. Cone grip top.
- Spring catch in open position
- Can be locked in open position with padlocks
- Actuator included

Function expansion

Lockout mechanism NZ.VZ/TZ, 5 holes

086538 SPERREINSATZ-Z-086538

Features

- Prevents unintentional closing of the door
- Can be secured with padlocks

Lockout mechanism NZ.VZ/TZ, 3 holes

091305 SPERREINSATZ MIT KETTE

Features

- Prevents unintentional closing of the door
- Can be secured with padlocks

046730 SPERREINSATZ-Z-046730

Features

- Prevents unintentional closing of the door
- Can be secured with padlocks

Protective plate NZ.VZ/TZ

059136 SCHUTZBLECH NZ/TZ

Adapter NZ/TZ 45/30

079033 ADAPTER NZ/TZ 45/30

Features

- The adapter NZ/TZ 45/30 is used to compensate for different profiles, doors/frame 45/30

Mounting accessories

Mounting plates EMP-B2 for actuators for safety switches CTP, TP...A, STA, STP, TX and TZ

093458 EMP-B2

Mounting plates EMP-SA for safety switches TZ

094401 EMP-SA

Features

- For vertical and horizontal mounting of safety switch TZ

Mounting plates EMP-B1 for actuators for safety switches CTP, TP...A, STA, STP, TX and TZ

093457 EMP-B1

Safety screws for actuators, M5 x 10

073455 M5X10-NIRO/V100 NZ/TZ

Features

- Safety screws M5 x 10
- Packaging unit 100 pieces

Safety screws for actuators, M5 x 16

073456 M5X16/V100

Features

- Safety screws M5 x 16
- Packaging unit 100 pieces

Safety screws M5 x 25

073457 M5X25/V100

Features

- Safety screws M5 x 25
- Packaging unit 100 pieces

Actuator

Hinged actuator right for safety switches NZ.VZ, NZ.VZ.VS and TZ

074412 RADIUSBETAETIGER-Z-R/V25

Features

- Two stainless safety screws per actuator
- Packaging unit 25 pieces

100406 RADIUSBETAETIGER-Z-R-C2194

Features

- Two stainless safety screws per actuator
- Smaller door radii

024299 RADIUSBETAETIGER-Z-R

Features

- Two stainless safety screws per actuator

Hinged actuator left for safety switches NZ.VZ, NZ.VZ.VS and TZ

100407 RADIUSBETAETIGER-Z-L-C2194

Features

- Two stainless safety screws per actuator
- Smaller door radii

024298 RADIUSBETAETIGER-Z-L

Features

- Two stainless safety screws per actuator

074413 RADIUSBETAETIGER-Z-L/V25

Features

- Two stainless safety screws per actuator
- Packaging unit 25 pieces

Actuators for safety switches NZ.VZ, NZ.VZ.VS and TZ

097436 BETAETIGER-Z-GME

Features

- Made of solid stainless steel
- Two stainless safety screws per actuator

072251 BETAETIGER-Z-GN

Features

- Two stainless safety screws per actuator

016849 BETAETIGER-Z-G

Features

- Two stainless safety screws per actuator

074411 BETAETIGER-Z-G/V25

Features

- Two stainless safety screws per actuator
- Packaging unit 25 pieces

Hinged actuator bottom for safety switches NZ.VZ, NZ.VZ.VS and TZ

048850 RADIUSBETAETIGER-Z-U

Features

- Two stainless safety screws per actuator

074414 RADIUSBETAETIGER-Z-U/V25

Features

- Two stainless safety screws per actuator
- Packaging unit 25 pieces

Hinged actuator top for safety switches NZ.VZ, NZ.VZ.VS and TZ

057950 RADIUSBETAETIGER-Z-O

Features

- Two stainless safety screws per actuator

074415 RADIUSBETAETIGER-Z-O/V25

Features

- Two stainless safety screws per actuator
- Packaging unit 25 pieces

Instructions

Betriebsanleitung Sicherheitsschalter TZ...

	Doc. no.	Version	Language	Download
Betriebsanleitung Sicherheitsschalter TZ... Operating Instructions TZ... Safety Switch Manual de instrucciones del interruptor de seguridad TZ... Mode d'emploi Interrupteur de sécurité TZ... Istruzioni di impiego dei finecorsa di sicurezza TZ...	2088062	09-05/18		6.9 MB
Instrukcja obsługi wyłącznika bezpieczeństwa TZ...	2088062	09-05/18		1.8 MB
Manual de instruções da chave de segurança TZ...	2088062	09-05/18		1.5 MB
Руководство по эксплуатации предохранительных выключателей TZ...	2088062	09-05/18		1.9 MB

Návod na obsluhu – bezpečnostný spínač TZ...	2088062	09-05/18		1.8 MB
使用说明书安全开关 TZ···	2088062	09-05/18		1.6 MB

Catalogs

Sicherheitsschalter mit Metallgehäuse Safety Switches with Metal Housing Bezpečnostní spínače s kovovým pouzdrem Interrupteurs de sécurité avec boîtier métallique 金属壳体 的安全开关 Interruptores de seguridad con carcasa metálica

	Doc. no.	Version	Language	Download
Sicherheitsschalter mit Metallgehäuse	100319	11-03/18		7.9 MB
Interrupteurs de sécurité avec boîtier métallique	100676	11-03/18		7.9 MB
Interruptores de seguridad con carcasa metálica	104856	11-03/18		14.0 MB
Safety Switches with Metal Housing	100369	11-03/18		7.9 MB
Bezpečnostní spínače s kovovým pouzdrem	121650	11-03/18		7.9 MB
金属壳体 的安全开关	102453	11-03/18		8.2 MB

Declaration of conformity

EU prohlášení o shodě

	Doc. no.	Version	Language	Download
EU-Konformitätserklärung Declaración UE de conformidad Déclaration UE de conformité Dichiarazione di conformità EU declaration of conformity	2077153	25-02/17		0.3 MB
EU prohlášení o shodě EU-overensstemmelseserklæring Δήλωση συμμόρφωσης της ΕΕ EU-vaatimustenmukaisuusvakuutus EU-típusbizonyítvány EU-conformiteitsverklaring Deklaracja zgodności UE Declaração de Conformidade UE Declarația de conformitate UE EÚ vyhlásenie o zhode	2077153	25-02/17		0.5 MB

CAD data

CAD data for this item on TraceParts