ITEM 099855 STP2A-528A024M

Description	Technical data	Accessories	Downloads

Features

- Actuating head made of metal
- Auxiliary release on the front
- Without door monitoring contact

Approach direction

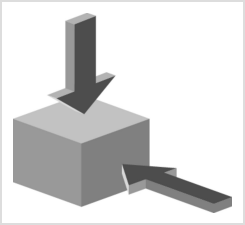

Figure

Horizontal and vertical
Can be adjusted in 90° steps

Solenoid operating voltage

- AC/DC 24 V +10%, -15%

Guard locking type

STP2 Open-circuit current principle, guard locking by applying voltage to the guard locking solenoid. Release by spring force.

Switching element

528 Slow-action switching contact 1 NC ⊖ + 1 NO

Auxiliary release

Is used for releasing the guard locking with the aid of a tool. To protect against tampering, the auxiliary release is sealed with sealing lacquer.

Approvals

Mechanical values and environment

Ambient temperature	-20 ... 55 °C
Mechanical life	1×10^6
Number of guard lock monitoring positively driven contacts	1
Number of guard lock monitoring NO contacts	1
Actuation frequency	1200 1/h
Locking force F_{max}	2500 N
Locking force F_{Zh}	2000 N
Retention force	20 N
Extraction force	30 N
Actuating force	35 N
Insertion depth	min.24,5 mm

Electrical connection ratings

Rated thermal current I_{th}	4 A
Utilization category according to EN 60947-5-1	
AC-15	
DC-13	
Rated insulation voltage U_i	250 V
Rated impulse withstand voltage U_{imp}	2,5 kV
Power consumption	8 W
Solenoid duty cycle	100 %
Connection cross-section	0,34 ... 1,5 mm²

in combination withActuator BETAETIGER-S-GT-SN

Mechanical values and environment

Overtravel	5 mm

Dimension drawing

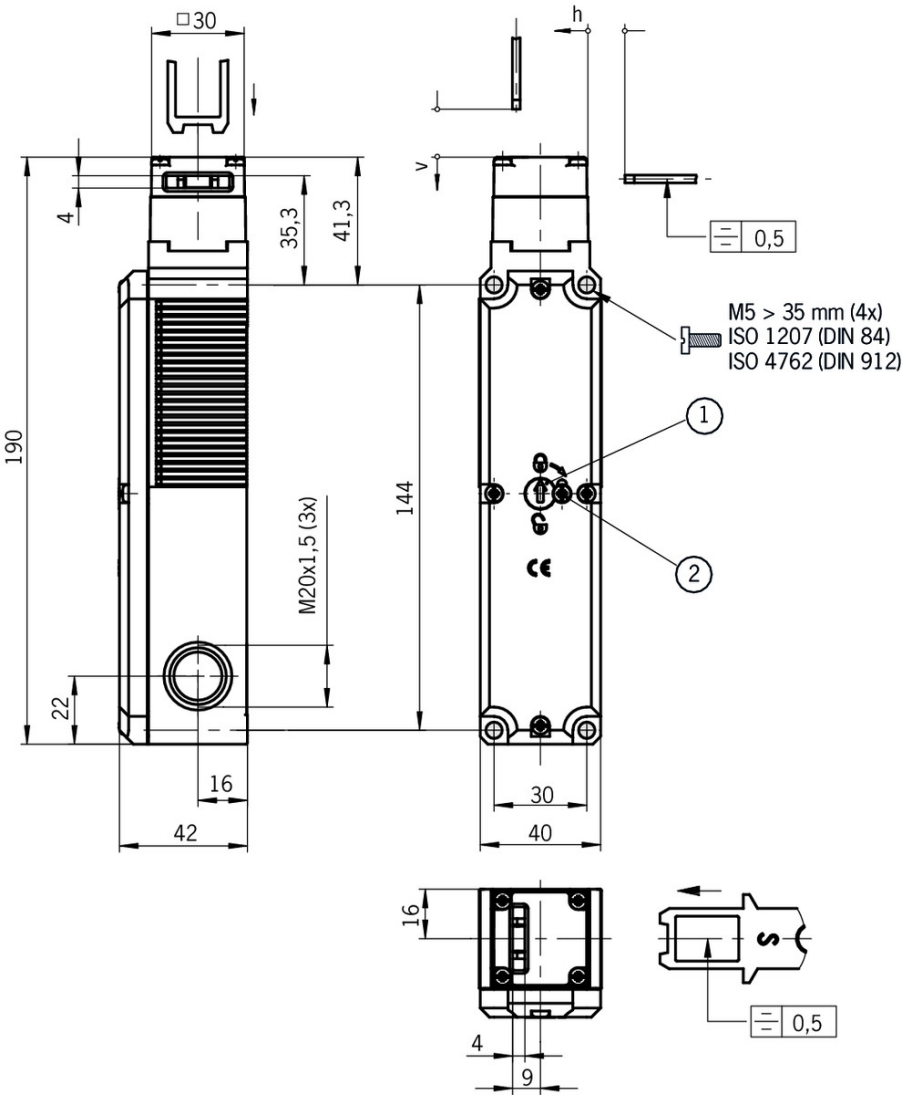

Legende

1 Auxiliary release

2 Locking screw

528

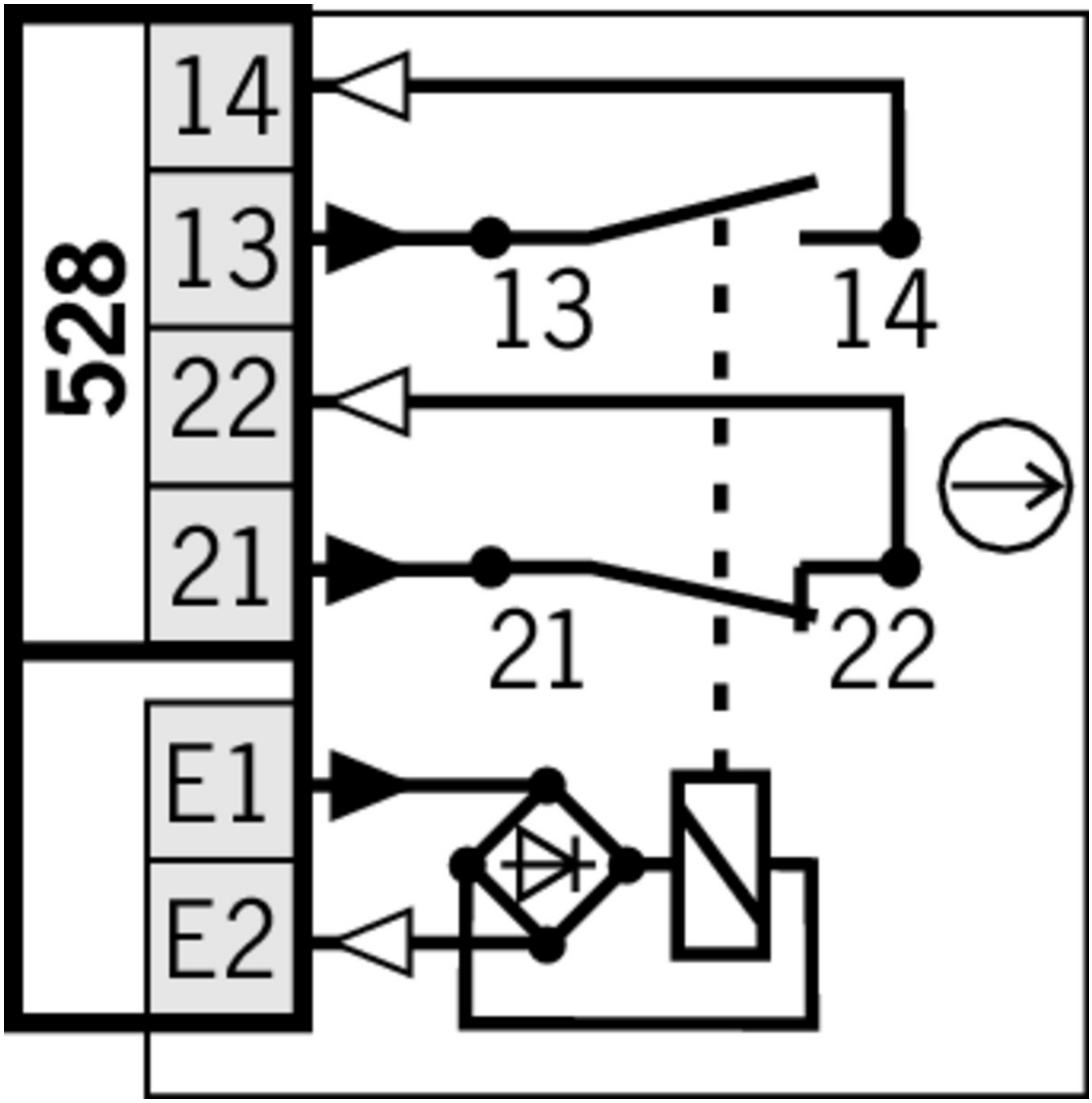

Switching functions

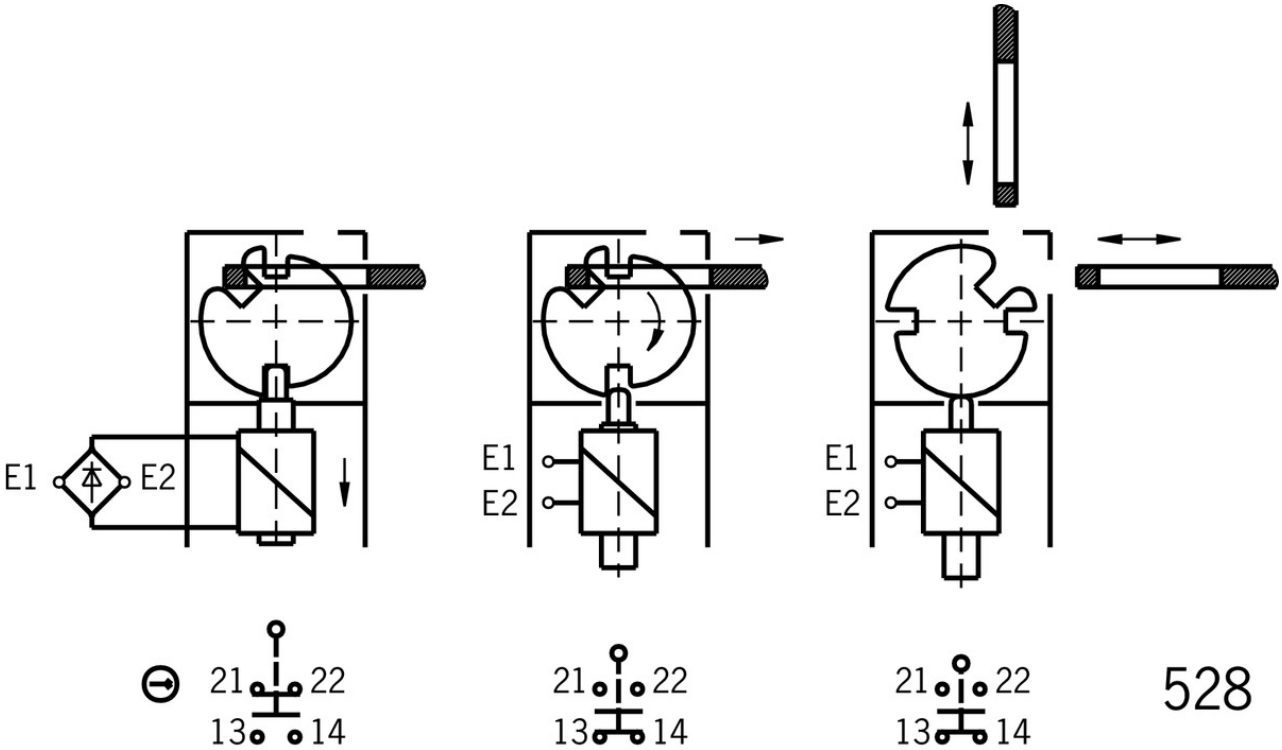

Mounting accessories

Mounting plates EMP-B2 for actuators for safety switches CTP, TP...A, STA, STP, TX and TZ

093458 EMP-B2

Mounting plates EMP-SB for safety switches CTP, TP...A, STA, STP and TX

093456 EMP-SB

Features

- For vertical and horizontal mounting of safety switches TP...A, STA, STP and TX

Mounting plates EMP-B1 for actuators for safety switches CTP, TP...A, STA, STP, TX and TZ

093457 EMP-B1

Switch bracket TP/STP GFK

096613 SCHALTERAUFNAHME TP/STP GFK

Features

- Switch bracket made of fiber glass reinforced plastic
- For left or right hinged doors

Function expansion

Built-in LED

087423 EINBAULEUCHTE LED M20X1,5

095510 EINBAULEUCHTE LED-F M20X1,5

Lock for auxiliary release for safety switches CTP/TP/STP

109212 SCHLOSS TP GLEICHSCHLIESSEND C2293

Features

- Identical locking
- Key can be removed only in “locked” position

084177 SCHLOSS TP VERSCHIEDENSCHLIESSEND

Features

- Lock unique locking
- Key removable in “unlocked” and “locked” positions

086236 SCHLOSS TP GLEICHSCHLIESSEND

Features

- Identical locking
- Key removable in “unlocked” and “locked” positions

Insertion funnel for safety switches SGP/STA/STP/STM/SGA

093157 EINFUEHRTRICHTER-S

Lockout bar STA/STP/SGA/SGP/STM

105701 SPERREINSATZ STP/STA

Features

- Prevents unintentional closing of the door
- Can be secured with padlocks

Handle for wire front release

099795 AY-HDL-099795

Features

- Suitable for all wire front releases

Release with automatic reset for safety switches CTP/TP/STP

103110 ENTRIEGELUNG RUECKSTELLEND TP/STP

LED set

098035 STP LED SET

Emergency unlocking for safety switches CTP/TP/STP

099877 NOTENTSPERRUNG TP/STP

Handle for escape release for safety switches TP/STP/STA

105329 FE-GRIFF

Wire front release

097747 AE-B-A1-02,0-F-097747

Features

- Can be used as escape release or emergency unlocking
- automatic return
- Sheath length 2 m (rope length 6 m)

098313 AE-B-A1-03,0-098313

Features

- Can be used as escape release or emergency unlocking
- No automatic return
- Sheath length 3 m (rope length 6 m)

111233 AE-B-A1-03,0-F-111233

Features

- Can be used as escape release or emergency unlocking
- automatic return
- Sheath length 3 m (rope length 6 m)

098314 AE-B-A1-04,0-098314

Features

- Can be used as escape release or emergency unlocking
- No automatic return
- Sheath length 4 m (rope length 6 m)

124770 AE-B-A1-06,0-F-124770

Features

- Can be used as escape release or emergency unlocking
- automatic return
- Rope length 6 m (without sheath)

096230 AE-B-A1-02,0-096230

Features

- Can be used as escape release or emergency unlocking

- No automatic return
- Sheath length 2 m (rope length 6 m)

125582 AE-B-A1-06,0-125582

Features

- Can be used as escape release or emergency unlocking
- No automatic return
- Rope length 6 m (without sheath)

Actuator

Hinged actuator S left/right for safety switches SGA/SGP/STA/STP/STM

096838 RADIUSBETAETIGER-S-LR-SN

Features

- Actuators made of stainless steel
- Two safety screws included
- For doors hinged on right and left

Hinged actuator S top/bottom for safety switches SGA/SGP/STA/STP/STM

095315 RADIUSBETAETIGER-S-OU-SN

Features

- Actuators made of stainless steel
- Two safety screws included
- For doors hinged at top and bottom

Hinged actuator L left/right, for safety switches SGA/SGP/STA/STP/STM for insertion funnel

096844 RADIUSBETAETIGER-S-LR-LN

Features

- Actuators made of stainless steel
- Two stainless safety screws per actuator
- For doors hinged on right and left

Hinged actuator L top/bottom, for safety switches SGA/SGP/STA/STP/STM for insertion funnel

096697 RADIUSBETAETIGER-S-OU-LN

Features

- Actuators made of stainless steel
- Two stainless safety screws per actuator
- For doors hinged at top and bottom

Actuator L, bent, for safety switches SGA/SGP/STA/STP/STM for insertion funnel

095741 BETAETIGER-S-WQT-LN

Features

- Two safety screws included
- Actuators with rubber bushings

105809 BETAETIGER-S-WT-LN-C2115

Features

- Two stainless safety screws per actuator
- Actuators with rubber bushings
- Minimum door radius 300 mm

Actuator S for safety switches SGA/SGP/STA/STP/STM

097861 BETAETIGER-S-G-SN-C2115

Features

- Two safety screws included
- Physically compatible with TP actuator P-G

095738 BETAETIGER-S-GT-SN

Features

- Two safety screws included
- Actuators with rubber bushings

Actuator L for safety switches SGA/SGP/STA/STP/STM for insertion funnel

095739 BETAETIGER-S-GT-LN

Features

- Two safety screws included
- Actuators with rubber bushings

Actuator S, bent, for safety switches SGA/SGP/STA/STP/STM

095740 BETAETIGER-S-WQT-SN

Features

- Two safety screws included

115073 BETAETIGER-S-W-SN-C2115

Features

- Two stainless safety screws per actuator
- Minimum door radius 300 mm

105808 BETAETIGER-S-WT-SN-C2115

Features

- Two stainless safety screws per actuator
- Actuators with rubber bushings
- Minimum door radius 300 mm

Spare parts

Replacement key for mechanical key release

099434 ERSATZSCHLUESSEL GLEICHSCHL.0354

Bolt

Bolt BTC-ST/G... without escape release for safety switches STA, STP, SGP and SGA

106284 BTC-ST/G-S-TH-00-X

Features

- Aluminum bolt
- For doors hinged on the left or right
- Can be locked in open position with padlocks
- Actuator included

Bolt S-... for safety switches STA, STP, SGP and SGA

096384 RIEGEL S-A

Features

- Steel bolt
- For doors hinged on the right
- Can be locked in open position with padlocks
- Actuator included

096385 RIEGEL S-C

Features

- Steel bolt
- For doors hinged on the left
- Can be locked in open position with padlocks
- Actuator included

Bolt STP-GFK for safety switches STA, STP, SGP and SGA

098121 RIEGEL STP-GFK

Features

- Fiber glass reinforced plastic bolt
- For doors hinged on the left or right
- Can be locked in open position with padlocks
- Actuator included

Connection material

Cable glands M20x1.5

086233 EKPM20/06 086233

Instructions

Инструкция по эксплуатации предохранительных выключателей STP...

	Doc. no.	Version	Language	Download
Betriebsanleitung Sicherheitsschalter STP... Manual de instrucciones del interruptor de seguridad STP... Mode d'emploi pour les interrupteurs de sécurité STP... Operating Instructions Safety Switches STP...	2095803	09-12/17		6.4 MB
Инструкция по эксплуатации предохранительных выключателей STP...	2095803	09-12/17		1.8 MB
İşletim kılavuzu Emniyet şalteri STP...	2095803	09-12/17		1.8 MB
Istruzioni di impiego dei finecorsa di sicurezza STP...	2095803	09-12/17		1.7 MB

Catalogs

Bezpečnostní spínače s plastovým pouzdrem Sicherheitsschalter mit Kunststoffgehäuse Safety Switches with Plastic Housing Interruptores de seguridad con carcasa plástica Interrupteurs de sécurité avec boîtier plastique 塑料壳体 的安全开关

	Doc. no.	Version	Language	Download
Sicherheitsschalter mit Kunststoffgehäuse	096955	11-03/18		6.6 MB
Interrupteurs de sécurité avec boîtier plastique	100677	11-03/18		6.6 MB
Interruptores de seguridad con carcasa plástica	104855	11-03/18		6.6 MB
Bezpečnostní spínače s plastovým pouzdrem	121649	11-03/18		6.6 MB
Safety Switches with Plastic Housing	096956	11-03/18		6.6 MB
塑料壳体 的安全开关	116243	11-03/18		6.2 MB

Declaration of conformity

EU prohlášení o shodě

	Doc. no.	Version	Language	Download
EU-Konformitätserklärung Declaración UE de conformidad Déclaration UE de conformité Dichiarazione di conformità EU declaration of conformity	2077153	25-02/17		0.3 MB
EU prohlášení o shodě EU-overensstemmelseserklæring Δήλωση συμμόρφωσης της ΕΕ EU-vaatimustenmukaisuusvakuutus EU-típusbizonyítvány EU-conformiteitsverklaring Deklaracja zgodności UE Declaração de Conformidade UE Declarația de conformitate UE EÚ vyhlásenie o zhode	2077153	25-02/17		0.5 MB