ITEM 100914 EINSTELLRAD HKB 58 METALL SIL/SW

Description	Technical data	Accessories	Downloads

Mechanical values and environment

Dimensions	Ø58
Material	Metal

Miscellaneous

Color	silver

Dimension drawing

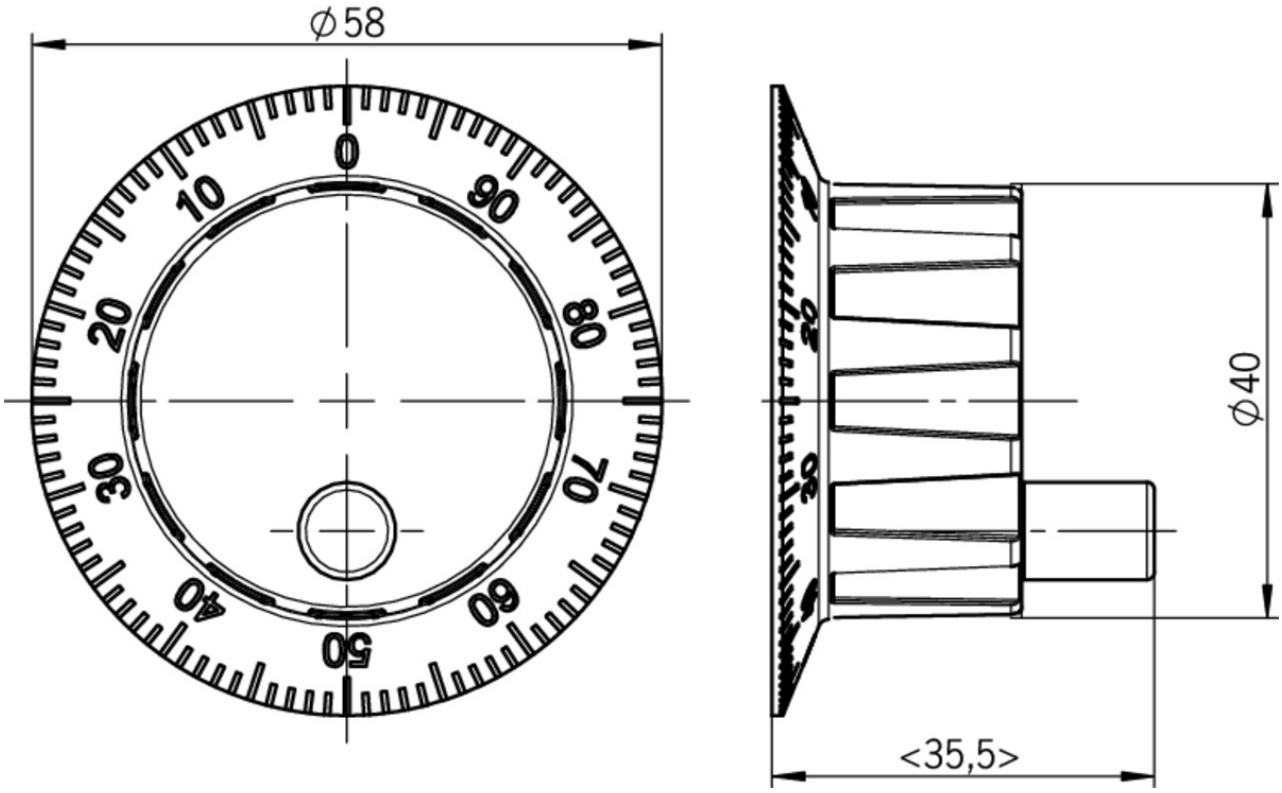

Catalogs

Handbediengeräte/Handräder Hand-Held Pendant Stations/Handwheels Pupitres portables/Manivelles

	Doc. no.	Version	Language	Download
Handbediengeräte/Handräder	098619	08-09/17		3.0 MB
Pupitres portables/Manivelles	111529	08-09/17		3.0 MB
Hand-Held Pendant Stations/Handwheels	099443	08-09/17		3.0 MB

CAD data

CAD data for this item on TraceParts