ITEM 105756 BCM-A-P2-SEM4-1

Description	Technical data	Accessories	Downloads

Features

- Conversion from M12 to ribbon cable
- Very compact design
- Easy handling

Suitable for safety switch

Safety switches with integrated AS-Interface are mostly equipped with an M12 plug connector. However, in the field the familiar AS-Interface ribbon cable is used both for the AS-i bus, and for the auxiliary power. The conversion from M12 to ribbon cable is realized using the bus coupling module. The module is very easy to use – it is only necessary to undo one screw to insert the ribbon cables.

Mechanical values and environment

Housing material	Reinforced thermoplastic
Weight	
Approx.	0,03 kg
Ambient temperature	-20 ... +70 °C

Degree of protection	IP67 [1]
Mounting method	Screw mounting [2]
Installation position	Any
Connection	
Line 1	AS-Interface bus ribbon cable [3]
Line 2	Power ribbon cable [4]
Safety switch	M12 socket

Electrical connection ratings

Operating voltage DC	max.36 V DC
Current	max.4 A
Rated insulation voltage U_i	
AS-Interface to power	200 V

[1] On single insertion of the cable

[2] (1 x M6)

[3] (AS-Interface +, AS-Interface -)

[4] (+24 V, 0 V)

Dimension drawing

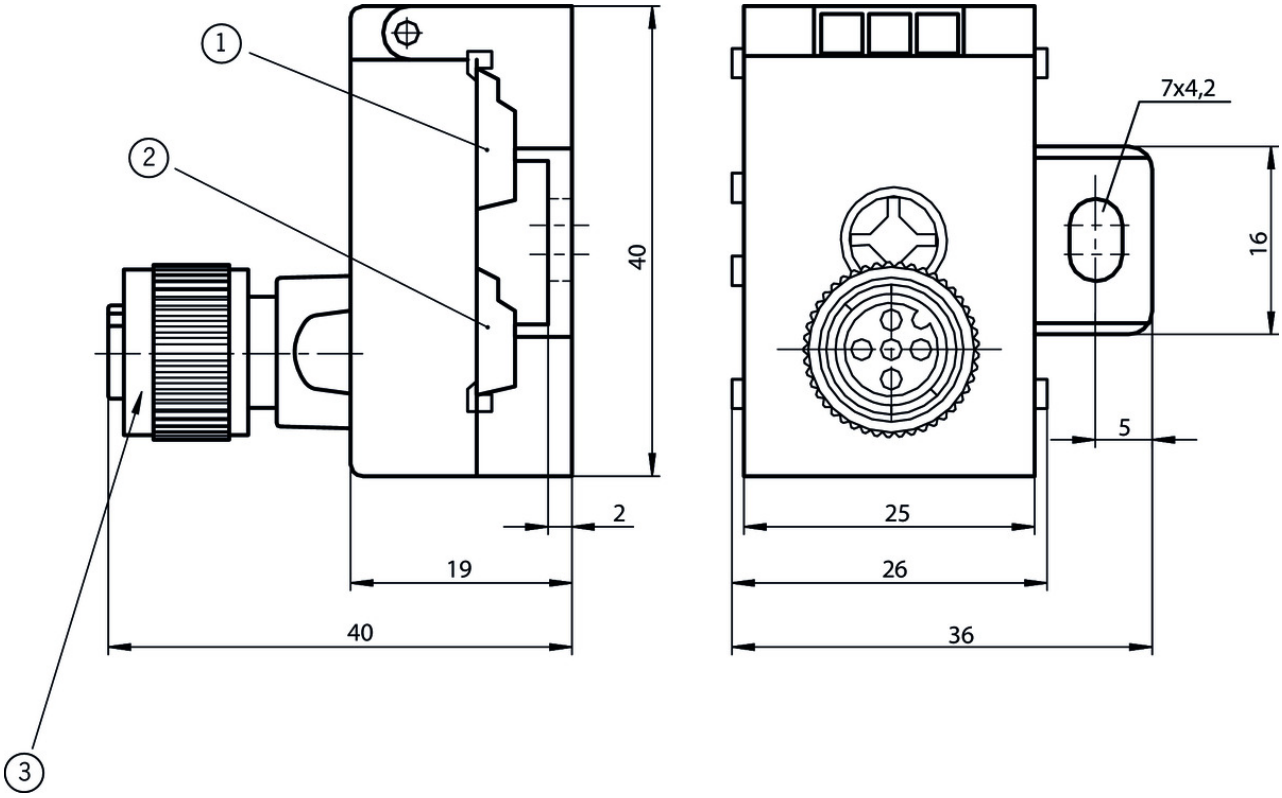

Legende

1 AS-Interface

2 Power

3 M12x1 socket, 5-pole

Terminal assignment

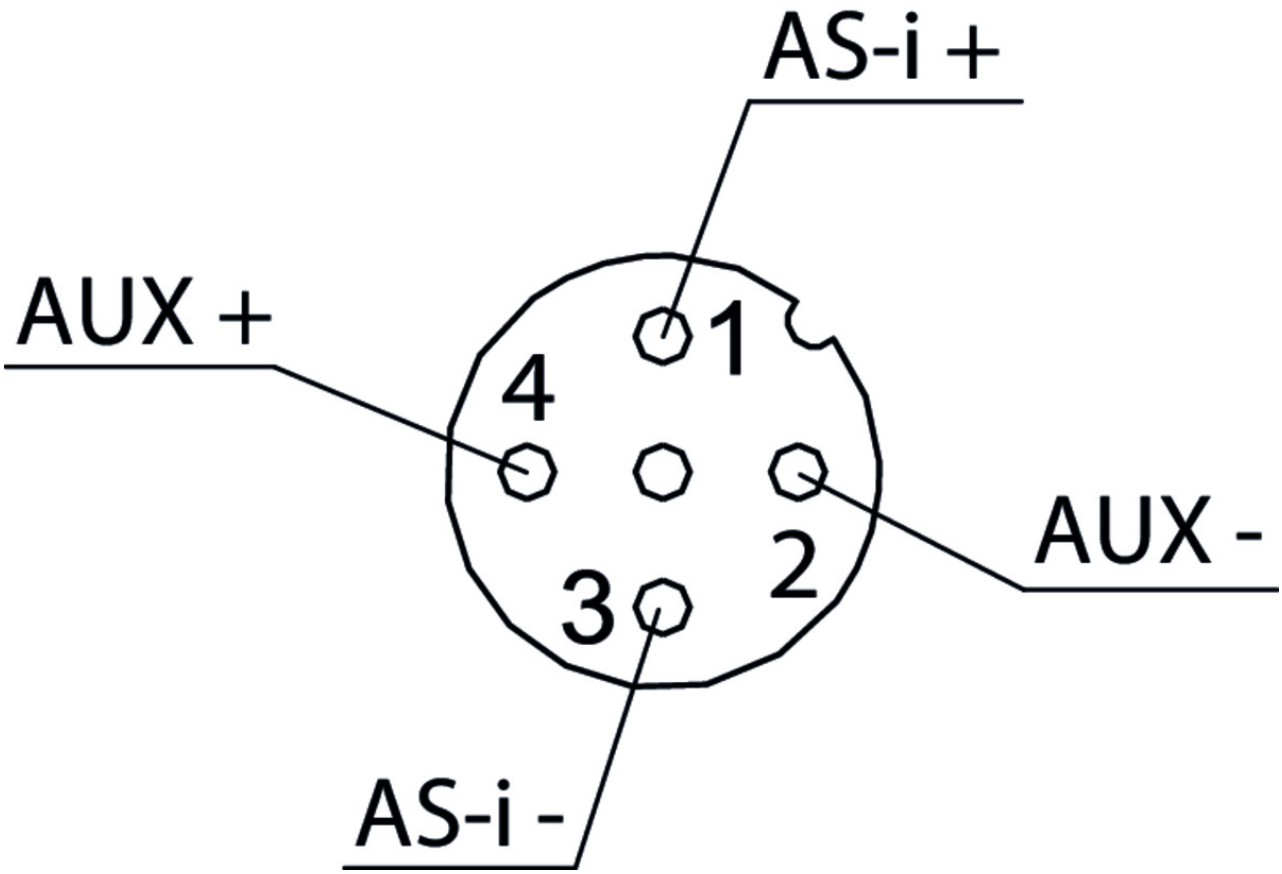

Catalogs

Sicherheitsschalter mit AS-Interface Safety Switches with AS-Interface Interrupteurs de sécurité avec AS-Interface

	Doc. no.	Version	Language	Download
Sicherheitsschalter mit AS-Interface	092164	11-04/17		2.3 MB
Interrupteurs de sécurité avec AS-Interface	112564	11-04/17		2.3 MB
Safety Switches with AS-Interface	092332	11-04/17		2.3 MB