ITEM 110690 MGB-L1HE-ARA-L-110690

Description	Technical data	Accessories	Downloads

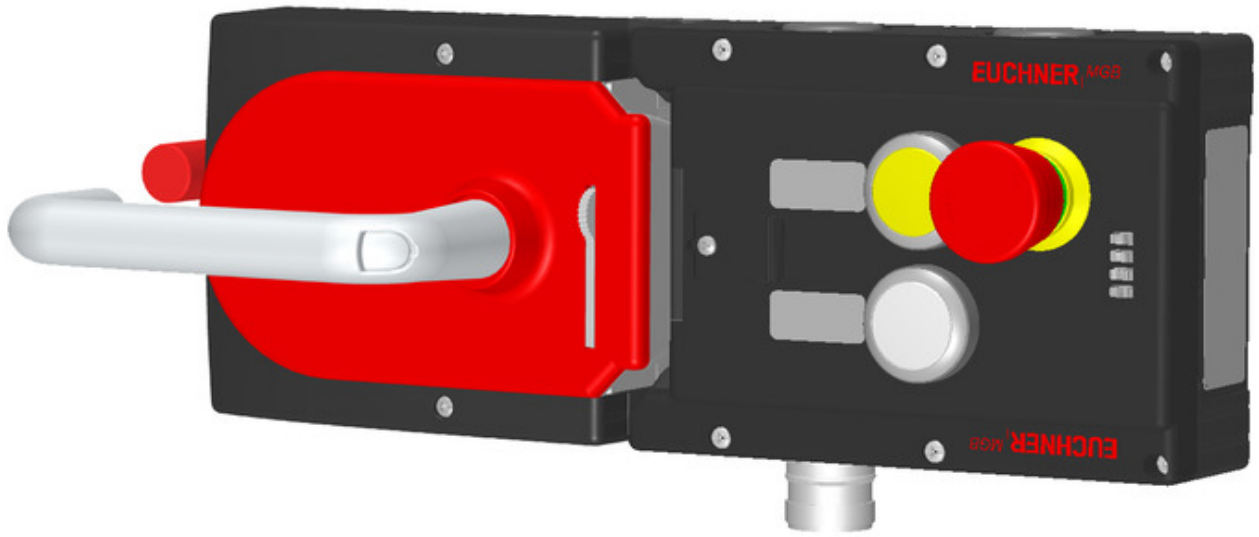

Features

- Guard locking with guard lock monitoring
- Can be connected in series with other AR devices (e.g. CES-AR and CET-AR)
- Emergency stop according to ISO 13850
- 2 pushbuttons (illuminated, ye, wh)
- Incl. adhesive labels
- With plug connector RC18
- With escape release
- Unicode
- Release monitoring

Guard locking type

MGB-L1... The locking arm is held in the locked position by spring force and is unlocked by solenoid force (closed-circuit current principle, mechanically locked).

Door hinge

A mechanical door stop is permanently integrated into the evaluation module of the MGB. A marking on the stop makes adjustment easier.

LED indicator

The LED indicator indicates all important system and status information.

Monitoring outputs

OT Bolt tongue inserted in the evaluation module
OI Diagnostics; there is a fault

Emergency stop device

S1 2 positively driven NC contacts, emergency stop with turn-to-reset, not illuminated

Pushbutton

S2 1 NO contact, yellow, illuminated
S3 1 NO contact, white, illuminated

Adhesive labels

Devices with adhesive labels have pre-formed recesses. The adhesive labels enclosed (standard size 12.5 x 27 mm) can be affixed in these recesses.

Components included in the set

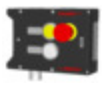

116303 Locking module MGB-L1-ARA-AA2A1-S1-L-116303
Features

100465 Escape release MGB-E-A-100465
Features

111158 Handle module MGB-H-AA1A3-L-111158
Features

Dimension drawing

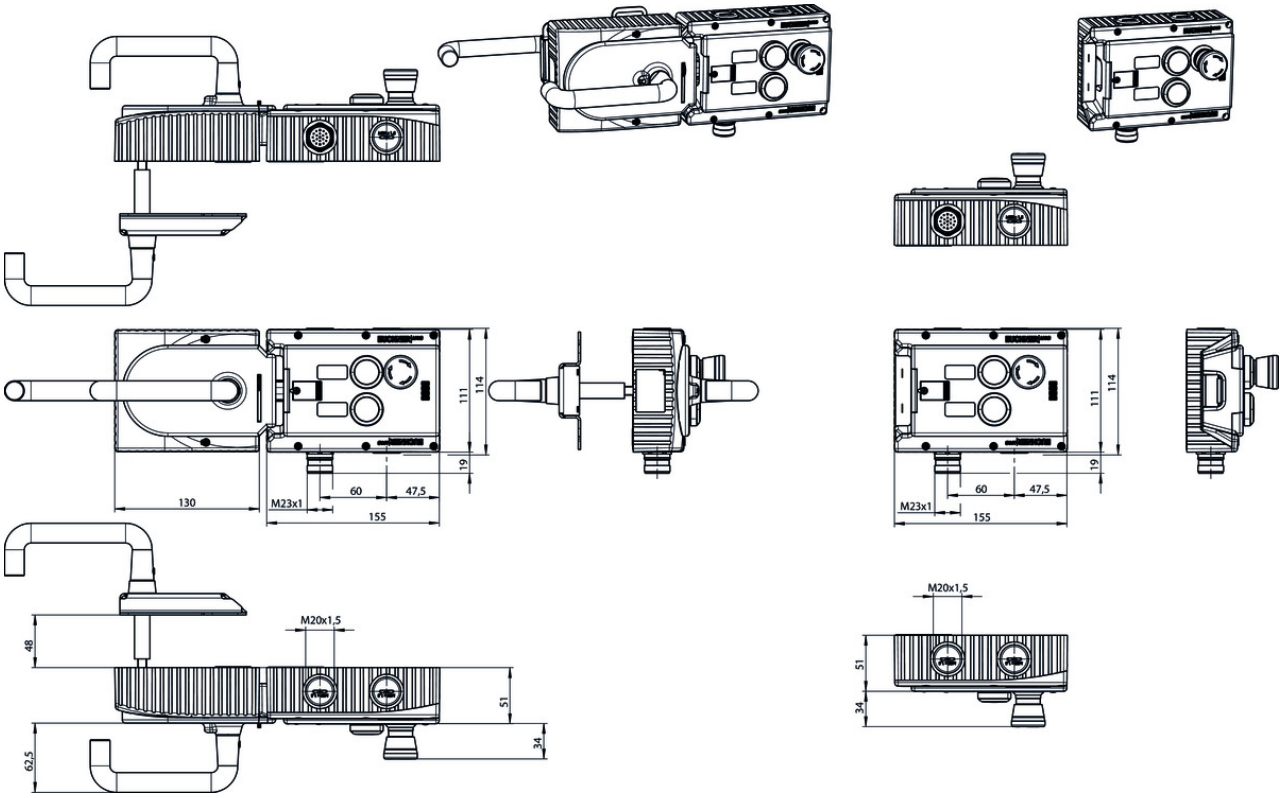

Dimension drawing

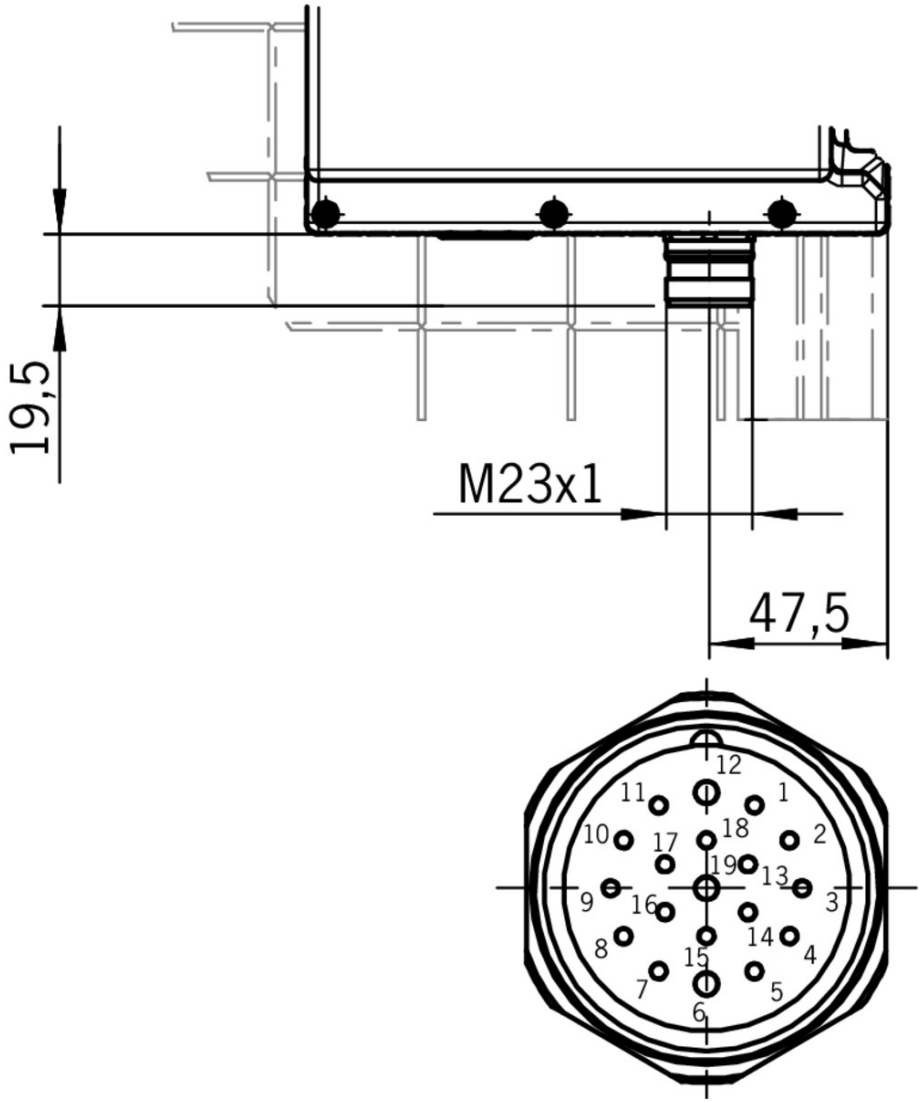

Plug connector RC18

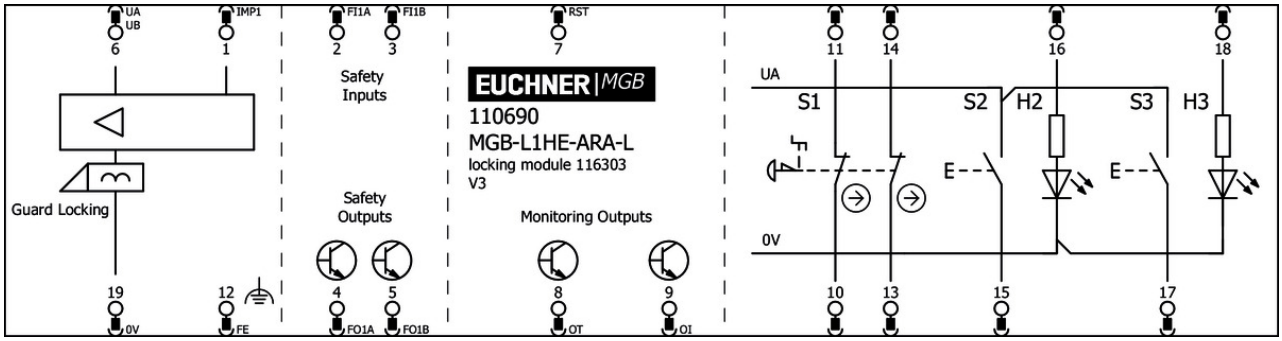

Spare parts

Handle module MGB-H... with automatically extending lockout mechanism

111158 MGB-H-AA1A3-L-111158

Features

- Intelligent bolt tongue

- Fold-out lockout mechanism
- Second automatically extending lockout mechanism
- Door handle

Locking module MGB-L1-ARA..., (guard locking by spring force) with 2 push buttons, emergency stop, incl. label carrier, RC18

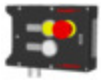

116303 MGB-L1-ARA-AA2A1-S1-L-116303

Features

- Guard locking with guard lock monitoring
- Can be connected in series with other AR devices (e.g. CES-AR and CET-AR)
- Emergency stop according to ISO 13850
- 2 pushbuttons (illuminated, ye, wh)
- Incl. adhesive labels
- With plug connector RC18
- Unicode
- Release monitoring

Function expansion

Door knob for MGB-H...

111460 MGB-A-DOORKNOB-S1-111460

Features

- Aluminum, silver anodized
- For mounting on all MGB handle modules MGB-H... up to V2.0.0
- e.g. on sliding doors

124030 MGB-A-DOORKNOB-S2-124030

Features

- Aluminum, silver anodized
- For mounting on all MGB handle modules MGB-H... from V3.0.0
- e.g. on sliding doors

Emergency unlocking for safety system MGB

112989 MGB-A-EMERGENCYRELEASE-112989

Features

- Quick emergency unlocking
- sealable

Escape release MGB-E-A...

100465 MGB-E-A-100465

Features

- Escape release from the danger zone
- Door handle signal red
- Extended actuation axis for thicker doors (available optionally)

Door handle for MGB-H...

110277 MGB-A-DOORHANDLE-S1-110277

Features

- Aluminum silver anodized
- For mounting on all MGB handle modules MGB-H up to V2.0.0

123926 MGB-A-DOORHANDLE-S2-123926

Features

- Aluminum silver anodized
- For mounting on all MGB handle modules MGB-H from V3.0.0

Extended actuation axis for MGB-E...

106761 AY-ERS-250-106761

Connection material

Connection cable with plug connector M23 with option C1825, 6m, straight

077014 C-M23F19-19XDIFPU06,0-MA-077014

Features

- M23 plug connector, 18-pin + PE
- Straight plug connector
- PUR cable
- Cable length 6 m
- With flying lead
- Cores color-coded

Connection cable with plug connector M23 with option C1825, 3m, straight

092816 C-M23F19-19XDIFPU03,0-MA-092816

Features

- M23 plug connector, 18-pin + PE
- Straight plug connector
- PUR cable
- Cable length 3 m
- With flying lead
- Cores color-coded

Connection cable with plug connector M23 with option C1825, 1.5m, straight

092761 C-M23F19-19XDIFPU01,5-MA-092761

Features

- M23 plug connector, 18-pin + PE
- Straight plug connector
- PUR cable
- Cable length 1.5 m
- With flying lead
- Cores color-coded

Replacement crimp contacts for female connector RC18 with option C1825

094310 CRIMPKONTAKT BUCHSE RCF-C1825

Features

- 19 crimp sockets
- Conductor cross-section 16 x 0.25 - 0.5 mm² and 3 x 0.75 - 1 mm²
- For plug connector RC18..C1825

Female plug RC18 straight with option C1825

077025 RC18EF-C1825

Features

- Plug connector M23, straight
- Number of pins: 19-pin with screen bonding clamp

Connection cable with plug connector M23 with option C1825, 40m, straight

102490 C-M23F19-19XDIFPU40,0-MA-102490

Features

- M23 plug connector, 18-pin + PE
- Straight plug connector
- PUR cable
- Cable length 40 m
- With flying lead
- Cores color-coded

Connection cable with plug connector M23 with option C1825, 30m, straight

095993 C-M23F19-19XDIFPU30,0-MA-095993

Features

- M23 plug connector, 18-pin + PE
- Straight plug connector
- PUR cable
- Cable length 30 m
- With flying lead
- Cores color-coded

Connection cable with plug connector M23 with option C1825, 8m, straight

077015 C-M23F19-19XDIFPU08,0-MA-077015

Features

- M23 plug connector, 18-pin + PE
- Straight plug connector
- PUR cable
- Cable length 8 m
- With flying lead
- Cores color-coded

Connection cable with plug connector M23 with option C1825, 10m, straight

092898 C-M23F19-19XDIFPU10,0-MA-092898

Features

- M23 plug connector, 18-pin + PE
- Straight plug connector
- PUR cable
- Cable length 10 m
- With flying lead
- Cores color-coded

Connection cable with plug connector M23 with option C1825, 15m, straight

077016 C-M23F19-19XDIFPU15,0-MA-077016

Features

- M23 plug connector, 18-pin + PE
- Straight plug connector
- PUR cable
- Cable length 15 m
- With flying lead
- Cores color-coded

Connection cable with plug connector M23 with option C1825, 20m, straight

092726 C-M23F19-19XDIFPU20,0-MA-092726

Features

- M23 plug connector, 18-pin + PE
- Straight plug connector
- PUR cable
- Cable length 20 m
- With flying lead
- Cores color-coded

Connection cable with plug connector M23 with option C1825, 25m, straight

092727 C-M23F19-19XDIFPU25,0-MA-092727

Features

- M23 plug connector, 18-pin + PE
- Straight plug connector
- PUR cable
- Cable length 25 m
- With flying lead
- Cores color-coded

Mounting accessories

Mounting plate for evaluation modules MGB-L.-AR.-... and MGB-L.-AP.-...

109490 MGB-A-MOUNTINGPLATE-L-109490

Features

- Easy and quick mounting (only two screws required)
- Quick module replacement
- Steel, powder-coated
- Suitable for doors hinged on the right or left

Mounting plate for all MGB handle modules

109491 MGB-A-MOUNTINGPLATE-H-109491

Features

- Easy and quick mounting (only two screws required)
- Quick module replacement
- Steel, powder-coated
- Suitable for doors hinged on the right or left

Mounting plate for escape release

109492 MGB-A-MOUNTINGPLATE-E-109492

Features

- Easy and quick mounting (only two screws required)
- Quick module replacement
- Steel, powder-coated
- Suitable for doors hinged on the right or left

Miscellaneous accessories

Lens set 6 colors

120378 AY-SET-LNS-0002-120378

Lens set 5 colors

120344 AY-SET-LNS-0001-120344

Lens set labeled

120377 AY-SET-LNS-SY01-120377

125359 AY-SET-LNS-SY02-125359

126158 AY-SET-LNS-SY03-126158

Adhesive labels

114529 MGB-A-PLATESET-NN01-114529

Features

- Adhesive labels suitable for MGB evaluation modules, bus modules and control modules
- silver, blank
- Packaging unit = 10 pcs.

Lens set, three colors

158307 AY-SET-LNS-SY04-158307

Instructions

Návod k použití – bezpečnostní systémy MGB-L1...AR.-... / MGB-L2...AR.-... a MGB-L1...AP.-... / MGB-L2...AP.-... od V3.0.0

	Doc. no.	Version	Language	Download
Betriebsanleitung MGB-L1...AR.-... / MGB-L2...AR.-... und MGB-L1...AP.-... / MGB-L2...AP.-... ab V3.0.0	2119167	04-05/18		3.7 MB
Mode d'emploi MGB-L1...AR.-... / MGB-L2...AR.-... et MGB-L1...AP.-... / MGB-L2...AP.-... à partir de V3.0.0	2119167	04-05/18		3.7 MB
Manual de instrucciones MGB-L1...AR.-... / MGB-L2...AR.-... y MGB-L1...AP.-... / MGB-L2...AP.-... V3.0.0 o superior	2119167	04-05/18		3.7 MB
Návod k použití – bezpečnostní systémy MGB-L1...AR.-... / MGB-L2...AR.-... a MGB-L1...AP.-... / MGB-L2...AP.-... od V3.0.0	2119167	04-05/18		4.0 MB
Operating Instructions MGB-L1...AR.-... / MGB-L2...AR.-... and MGB-L1...AP.-... / MGB-L2...AP.-... from V3.0.0	2119167	04-05/18		3.7 MB
Istruzioni di impiego MGB-L1...AR.-... / MGB-L2...AR.-... und MGB-L1...AP.-... / MGB-L2...AP.-... da V3.0.0	2119167	04-05/18		3.7 MB
Handleiding MGB-L1...AR.-... / MGB-L2...AR.-... en MGB-L1...AP.-... / MGB-L2...AP.-... vanaf V3.0.0	2119167	04-05/18		3.7 MB
Instrukcja obsługi MGB-L1...AR.-... / MGB-L2...AR.-... i MGB-L1...AP.-... / MGB-L2...AP.-... od V3.0.0	2119167	04-05/18		4.0 MB
Manual de instruções MGB-L1...AR.-... / MGB-L2...AR.-... e MGB-L1...AP.-... / MGB-L2...AP.-... a partir de V3.0.0	2119167	04-05/18		3.7 MB
Инструкция по эксплуатации MGB-L1...AR.-... / MGB-L2...AR.-... и MGB-L1...AP.-... / MGB-L2...AP.-... с V3.0.0	2119167	04-05/18		4.2 MB
Návod na prevádzku Bezpečnostné systémy MGB-L1...AR.-... / MGB-L2...AR.-... a MGB-L1...AP.-... / MGB-L2...AP.-... od V3.0.0	2119167	04-05/18		4.0 MB
Instruktionsbok MGB-L1...AR.-... / MGB-L2...AR.-... och MGB-L1...AP.-... / MGB-L2...AP.-... fr. V3.0.0	2119167	04-05/18		3.7 MB
İşletim kılavuzu MGB-L1...AR.-... / MGB-L2...AR.-... ve MGB-L1...AP.-... / MGB-L2...AP.-... itibaren V3.0.0	2119167	04-05/18		4.1 MB

操作指示書 安全システム MGB-L1...-AR.-... / MGB-L2...-AR.-... および MGB-L1...-AP.-... / MGB-L2...-AP.-... V3.0.0以降	2119167	04-05/18		4.1 MB
使用说明书 安全系统 MGB-L1···-AR.-··· / MGB-L2···-AR.-···和MGB-L1···-AP.-··· / MGB-L2···-AP.-··· V3.0.0以上	2119167	04-05/18		4.1 MB

Sicherheitsinformation (Teil der Betriebsanleitung Sicherheitssystem MGB-AR/MGB-AP) ab V3.0.0

	Doc. no.	Version	Language	Download
Sicherheitsinformation (Teil der Betriebsanleitung Sicherheitssystem MGB-AR/MGB-AP) ab V3.0.0 Información de seguridad (parte del manual de instrucciones Sistema de seguridad MGB-AR/MGB-AP) V3.0.0 o superior Information de sécurité (partie du mode d'emploi Système de sécurité MGB-AR/MGB-AP) à partir de V3.0.0 Informazioni sulla sicurezza (Parte delle istruzioni di impiego Sistema di sicurezza MGB-AR/MGB-AP) da V3.0.0 Säkerhetsinformation (Del av instruktionsboken Säkerhetssystem MGB-AR/MGB-AP) från V3.0.0 Safety Information (Part of the Operating Instructions Safety System MGB-AR/MGB-AP) from V3.0.0	123151	01-02/15		0.6 MB
Veiligheidsinformatie (Deel van de handleiding Beveiligingssysteem MGB-AR/MGB-AP) vanaf V3.0.0	123151	01-02/15		0.2 MB
Informação de segurança (Parte do manual de instruções Sistema de segurança MGB-AR/MGB-AP) a partir de V3.0.0	123151	01-02/15		0.2 MB
Bezpečnostní informace (součást návodu k použití „Bezpečnostní systém MGB-AR/MGB-AP“) od V3.0.0	123151	01-02/15		0.2 MB
Informacje o bezpieczeństwie (Część instrukcji obsługi System bezpieczeństwa MGB-AR/MGB-AP) od V3.0.0	123151	01-02/15		0.2 MB
Информация о безопасности (часть инструкции по эксплуатации Предохранительная система MGB-AR/MGB-AP) с V3.0.0	123151	01-02/15		0.3 MB
Bezpečnostná informácia (časť návodu na prevádzku Bezpečnostný systém MGB-AR/MGB-AP) od V3.0.0	123151	01-02/15		0.2 MB
Güvenlik bilgisi (İşletim kılavuzunun parçası emniyet sistemi MGB-AR/MGB-AP) V3.0.0 ve üstü	123151	01-02/15		0.3 MB
安全信息 (安全系统 MGB-AR/MGB-AP使用说明书的组成部分) V3.0.0以上	123151	01-02/15		0.3 MB
安全情報 MGB-AR/MGB-AP	123151	01-02/15		0.6 MB

Catalogs

Multifunctional Gate Box MGB Multifunctional Gate Box MGB Multifunctional Gate Box MGB Multifunctional Gate Box MGB Multifunctional Gate Box MGB 多功能系统安全控制系统 MGB

	Doc. no.	Version	Language	Download
Multifunctional Gate Box MGB	106108	10-02/18		8.2 MB
Multifunctional Gate Box MGB	109155	10-02/18		8.2 MB
Multifunctional Gate Box MGB	114433	10-02/18		8.3 MB
Multifunctional Gate Box MGB	121652	10-02/18		8.0 MB
Multifunctional Gate Box MGB	106109	10-02/18		8.2 MB
多功能系统安全控制系统 MGB	155883	10-02/18		8.3 MB

Declaration of conformity

EU-Konformitätserklärung

	Doc. no.	Version	Language	Download
EU-Konformitätserklärung Declaración UE de conformidad Déclaration UE de conformité Dichiarazione di conformità EU declaration of conformity	2123150	08-01/17		0.3 MB

CAD data

CAD data for this item on TraceParts