ITEM 091389 GSBF08D16-502-M

Description | Technical data | Accessories | Downloads

Features

- plunger spacing 16 mm
- Upright housing
- Degree of protection IP67 according to IEC 60529

Switching element

ES 502 E Snap-action switching contact 1 NC + 1 NO

Approvals

EAC

Mechanical values and environment

Design	Upright
Housing material	Die-cast aluminum, anodized

Weight	
Net	3,3 kg
Ambient temperature	-5 ... 80 °C
Degree of protection	IP67
Mechanical life	30×10^6
Contact material	Silver alloy, gold flashed
Switching principle	Snap-action switching contact [1]
Plunger spacing	16 mm
Installation position	Any
Number of switching elements	8
Number of NC contacts	8
Number of NO contacts	8
Connection	
4 x	M25 x 1.5
Approach speed	
max.	0,01 ... 40 m/min
Actuating element	Chisel plunger [2]
Actuating force	min.20 N

Electrical connection ratings

Rated thermal current I_{th}	8 A
Utilization category according to EN 60947-5-1	
AC-15	6A 230V
DC-13	6A 24V
AC-12	8 A, 250 V
Short circuit protection according to IEC 60269-1	
(Fuse)	8A gG
Rated insulation voltage U_i	250 V
Rated impulse withstand voltage U_{imp}	2,5 kV
Switching current	
Min. at DC 12V	min.10 mA
Connection cross-section	0,34 ... 1,5 mm²

[1] Contact closing time < 4 ms contact bounce time < 3 ms

[2] Operating point accuracy ± 0.002. The reproducible switching point accuracy refers to the axial travel of the plunger after the switching element ES 502 E has been run-in with approx. 2000 operating cycles.

Dimension drawing

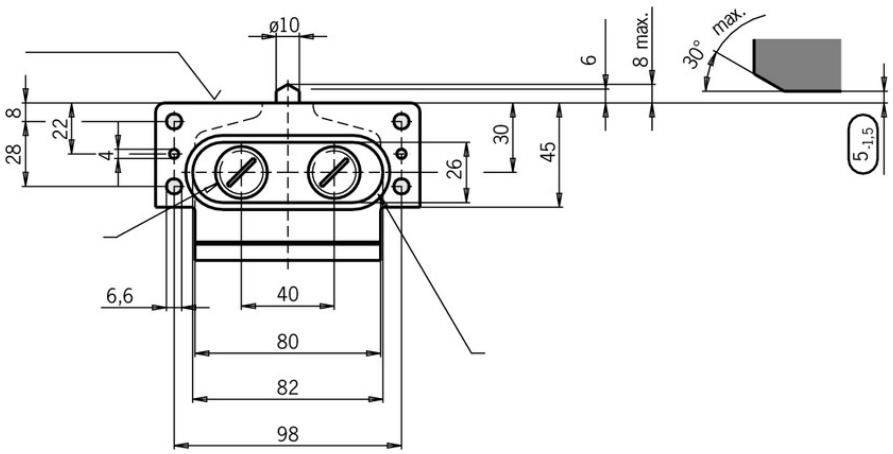

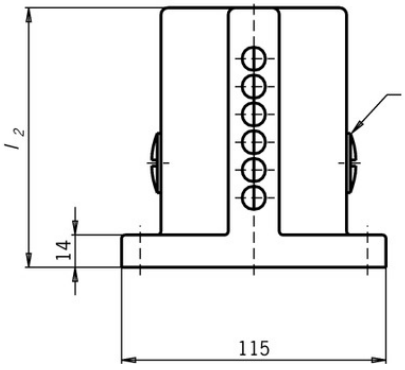

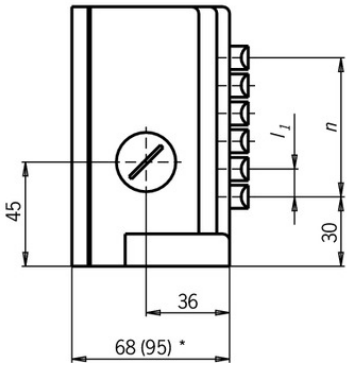

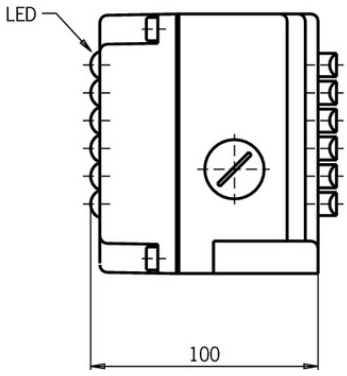

ES 502 E

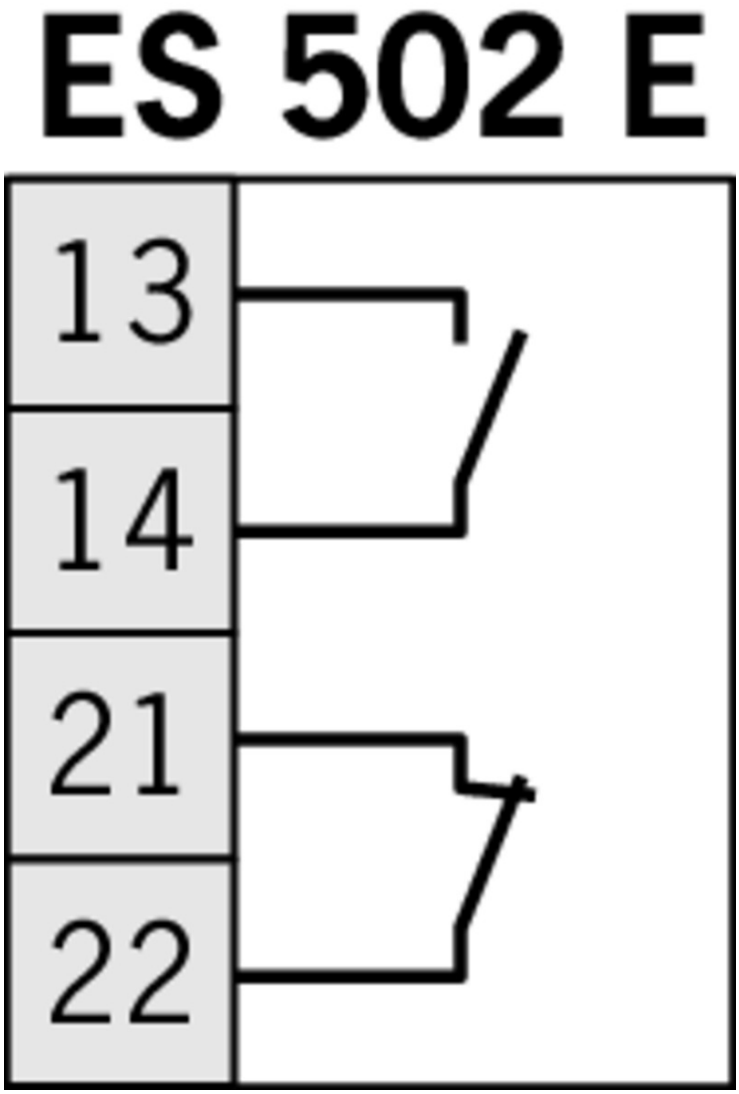

Instructions

Betriebsanleitung Präzisions-Reihengrenztaster RG, GS, GL 12/16 mm

	Doc. no.	Version	Language	Download
Betriebsanleitung Präzisions-Reihengrenztaster RG, GS, GL 12/16 mm Mode d'emploi Boîtiers multipistes de précision RG, GS, GL 12/16 mm Istruzioni di impiego Finecorsa multipli di precisione RG, GS, GL12/16 mm Operating Instructions Precision Multiple Limit Switches RG, GS, GL12/16 mm	032307	07-07/16		1.4 MB

CAD data

CAD data for this item on TraceParts