CE

Model Number

IQC37-30

Data carrier

Features

- Memory 8 kByte
- Degree of protection IP68

Dimensions

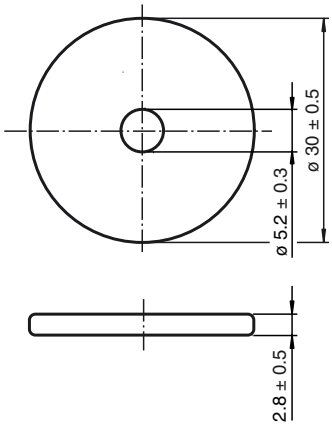

Technical data

General specifications	
Operating frequency	13.56 MHz
Transfer rate	26 kBit/s
Memory	
Chip Type	FRAM MB89R112 (Fujitsu)
FRAM	8 kByte
UID	64 Bit
Memory organization	32 bytes/block
Read cycles	unlimited
Write cycles	unlimited
Data retention period	10 years
Directive conformity	
Electromagnetic compatibility	
R&TTE Directive 1995/5/EC	EN 300330-2:2010 V1.5.1
Standard conformity	
Electromagnetic compatibility	EN 300330-2:2010 V1.5.1
Degree of protection	EN 60529:2000
RFID	ISO/IEC 15693-1:2010 , ISO/IEC 15693-2:2006 , ISO/IEC 15693-3:2009 , ISO/IEC 18000-3:2008
Ambient conditions	
Ambient temperature	-20 ... 85 °C (-4 ... 185 °F)
Storage temperature	-40 ... 85 °C (-40 ... 185 °F)
Mechanical specifications	
Degree of protection	IP68 according to EN 60529
Material	
Housing	PA6T/6I-GF50
Installation	
In air	yes
Mass	3 g
Construction type	Cylindrical

Notes

The surface containing the text must face the read/write head.

Release date: 2019-01-24 10:22 Date of issue: 2019-01-25 262959_eng.xml

Read/write distances

(1) IQH1-18GM-V1 (2) IQH1-F61-V1 (3) IQH1-FP-V1

(4) IQH1-F15-V1

Reading range in air IQC37-30

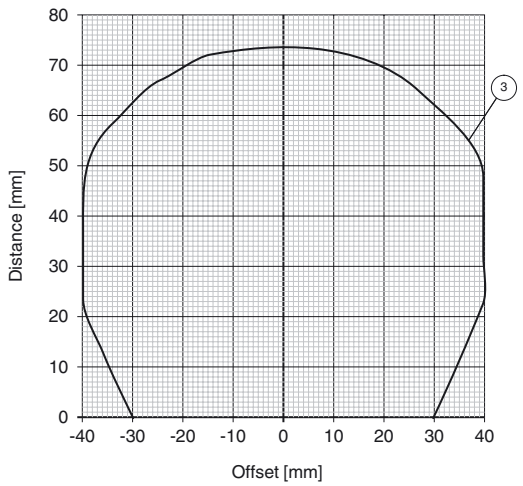

Release date: 2019-01-24 10:22 Date of issue: 2019-01-25 262959_eng.xml

Refer to “General Notes Relating to Pepperl+Fuchs Product Information”.
Pepperl+Fuchs Group www.pepperl-fuchs.com
USA: +1 330 486 0001 fa-info@us.pepperl-fuchs.com
Germany: +49 621 776 4411 fa-info@de.pepperl-fuchs.com
Singapore: +65 6779 9091 fa-info@sg.pepperl-fuchs.com
PEPPERL+FUCHS SENSING YOUR NEEDS