Datasheet - AZM400Z-ST2-I2-2P2P-T-E

Solenoid interlock / AZM400

(Minor differences between the printed image and the original product may exist!)

- Bistable, motor-driven system
- Clamping force 10.000
- Release possible against lateral forces up to 300 N
- PL e / cat. 4 / SIL 3 for interlocking and guard locking function
- Two-channel input signal of the guard locking function
- Operation on P/P- and P/N-switching outputs
- High tolerance to door misalignment
- Repeated individual coding with RFID technology
- Coding level "High" according to ISO 14119
- 2 Connector M12, 8- and 5-poles
- Guard locking monitored
- 2 Diagnostic outputs
- Emergency exit
- Electric manual release with auxiliary voltage

Ordering details

Product type description	AZM400Z-ST2-I2-2P2P-T-E
Article number	103003836
EAN Code	4030661472683
eCl@ss	27-27-26-03

Approval

Approval	cULus TÜV

Classification

Interlocking function:	
Standards	ISO 13849-1, IEC 61508
PL	up e
Control category	up 4
PFH value	1.0 x 10^{-9} / h
PFD value	9.0 x 10^{-5}
SIL	up 3
Mission time	20 Years
Guard locking function:	
Standards	ISO 13849-1, IEC 61508
PL	up e
Control category	up 4
PFH value	1.8 x 10^{-9}/h
PFD value	1.6 x 10^{-4}
SIL	up 3
Mission time	20 Years

Global Properties

Permanent light	AZM400
Standards	IEC 60947-5-1, ISO 14119, ISO 13849-1, IEC 61508
Compliance with the Directives (Y/N) CE	Yes
Suitable for safety functions (Y/N)	Yes
Active principle	Magnetic field / RFID
Coding	Individual coding, multiple teaching
Coding levels according to ISO 14119	High
Material of the housings	light alloy die-casting
Housing coating	None
Weight	740
Guard locking monitored (Y/N)	Yes
Idle assignable pushbutton and LED (Y/N)	No
Reaction time	≤ 100
Time to readiness	≤ 1.5 s
Recommended actuator	AZM400-B1

Mechanical data

Design of electrical connection	2 Connector M12, 8- and 5-poles
Interlocking principle	bistable
Mechanical life	≥ 1.000.000 operations
- which have a lateral force Fquer = 100	100.000 operations
Switch distance	
- Allowable distance actuator / device incl. angular misalignment	1 … 7
- Minimum distance devices	30
restistance to shock	30 / 11
Resistance to vibration	10 … 150 HZ, Amplitude 0,35 mm
Emergency unlocking device (Y/N)	Yes
Manual release (Y/N)	No
Electronic manual release available (Y/N)	Yes
Clamping force	10.000
Max. lateral force at bolt return (against locked door)	300
- Notice: does not apply to emergency exit, Bowden cable and manual release	
fixing screws	2 x M6 (10.9)
Tightening torque for fixing screws	8
Actuator and interlock misalignment	2
With securing holes for Bowden cable assembly (Y/N)	No
Tightening torque of the fixing screws Bowden cable	No information

Ambient conditions

Ambient temperature	
- Min. environmental temperature	0
- Max. environmental temperature	+55
Storage and transport temperature	
- Min. Storage and transport temperature	−40
- Max. Storage and transport temperature	+85
Protection class	IP66, IP67 to IEC/EN 60529
Protection rating	III
Air clearances and creepage distances To IEC/EN 60664-1	
- Rated impulse withstand voltage	0,8
- Overvoltage category	III

- Degree of pollution	3

Electrical data

Number of auxiliary contacts	0
Number of safety contacts	2
Cross circuit/short circuit recognition possible (Y/N)	Yes
Supply voltage (stabilised PELV)	24 −15 / +10
Switch frequency	0,3
Operating current	0,1 A
- During the displacement of the bolt	0,6 A
Rated insulation voltage	32 VDC
Required rated short-circuit current	100 A
Device insulation	2 A
Auxiliary voltage (uninterruptible power supply)	24 −15 / +10
Min. open / close cycle (Motor)	3
- with continuous operation min. average cycle time	20

Electrical data - Safety outputs

Safety outputs	Y1 and Y2
Design of control output	short-circuit proof, p-type
Rated operating voltage	24
Residual current	≤ 0,5
Operating current	0,25 A
Utilisation category	DC-12, DC-13
Test impulse width	≤ 0,4
Voltage drop	≤ 2
Test frequency	1

Electrical data - Diagnostic output

Serial diagnostics (Y/N)	No
Design of control output	short-circuit proof, p-type
Number of diagnostic signals	2
Rated operating voltage	24
Operating current	0,05 A
Voltage drop	≤ 2
Utilisation category	DC-12, DC-13
Operating principle of the diagnostic output	The short-circuit-proof diagnostic outputs OUT1 and OUT2 can be used for central displaying or control tasks, e.g. in a PLC.
notice	The diagnostic output are not safety relevant outputs!

Electrical data - Control inputs

Control inputs to unlock	E1 and E2, p-type; E3, n-type
Switching thresholds	−3 … 5 (Low) 15 … 30 (High)
Operating current per input	> 10 … < 15 / 24
Permissible residual drive current	1.5
Allowable discrepancy time input	≤ 10
Acceptable test impulse on the input signal	< 5
- with a test impulse distance of	≥ 40

LED switching conditions display

LED switching conditions display (Y/N)	Yes
LED switching conditions display	
- Supply voltage	green LED
- switching condition	yellow LED
- Error functional defect	red LED

ATEX

Explosion protection categories for gases	None
Explosion protected category for dusts	None

Dimensions

Dimensions of the sensor	
- Width of sensor	77.8
- Height of sensor	166.7
- Length of sensor	65.3

Pin assignment

1	A1 Supply voltage
2	E1 Control input 1
3	- (not used)
4	Y1 Safety output 1
5	OUT1 Diagnostic output 1
6	E3 Control input 3
7	Y2 Safety output 2
8	E2 Control input 2
2 (ST2)	H2 GND
1 (ST2)	A1 Supply voltage U_B
3 (ST2)	A2 GND
5 (ST2)	FE Functional earth connection
4 (ST2)	H1 Auxiliary voltage U_{he}

Included in delivery

Actuators must be ordered separately.

Ordering code

AZM400Z(1)(2)(3)(4)(5)

(1)	
ST	1 connector plug M12, 8-pole
ST2	2 connector plug M12, 8-pole / 5-pole
(2)	
without	Included in standard version Coding
I1	Individual coding
I2	Individual coding, multiple teaching
(3)	
1P2P	1 Diagnostic output and 2 Safety outputs, p-type (only for ST)
2P2P	2 and 2 Safety outputs, p-type (only for ST2)

(4)	
without	Manual release
T	Emergency exit
BOW	
(5)	
without	without (only for ST)
E	(only for ST2)

Documents

Operating instructions and Declaration of conformity (it) 1 MB, 26.10.2017
Code: mrl_azm400_it

Operating instructions and Declaration of conformity (pl) 1 MB, 18.01.2018
Code: mrl_azm400_pl

Operating instructions and Declaration of conformity (pt) 1 MB, 08.01.2018
Code: mrl_azm400_pt

Operating instructions and Declaration of conformity (cn) 1 MB, 22.11.2018
Code: mrl_azm400_cn

Operating instructions and Declaration of conformity (de) 1 MB, 07.09.2017
Code: mrl_azm400_de

Operating instructions and Declaration of conformity (jp) 1 MB, 30.06.2016
Code: mrl_azm400_jp

Operating instructions and Declaration of conformity (en) 1 MB, 07.09.2017
Code: mrl_azm400_en

Operating instructions and Declaration of conformity (fr) 1 MB, 19.09.2017
Code: mrl_azm400_fr

Operating instructions and Declaration of conformity (nl) 1 MB, 27.07.2018
Code: mrl_azm400_nl

Operating instructions and Declaration of conformity (es) 1 MB, 28.09.2017
Code: mrl_azm400_es

Brochure (pl) 705 kB, 01.02.2016
Code: b_azm400p01_pl

Brochure (es) 696 kB, 01.02.2016
Code: b_azm400p01_es

Brochure (fr) 688 kB, 01.02.2016
Code: b_azm400p01_fr

Brochure (de) 702 kB, 02.10.2015
Code: b_azm400p01_de_rev2016

Brochure (pt) 824 kB, 02.02.2016
Code: b_azm400p01_pt

Brochure (en) 708 kB, 05.10.2015
Code: b_azm400p01_en_rev2016

Brochure (it) 691 kB, 01.02.2016
Code: b_azm400p01_it

TÜV certification (de, en) 653 kB, 31.07.2017
Code: z_azmp06

Images

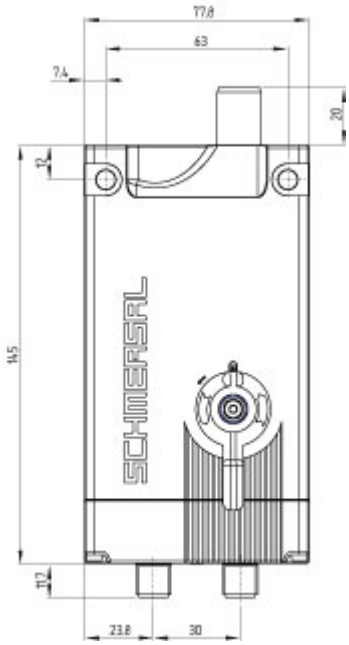

Dimensional drawing (basic component)

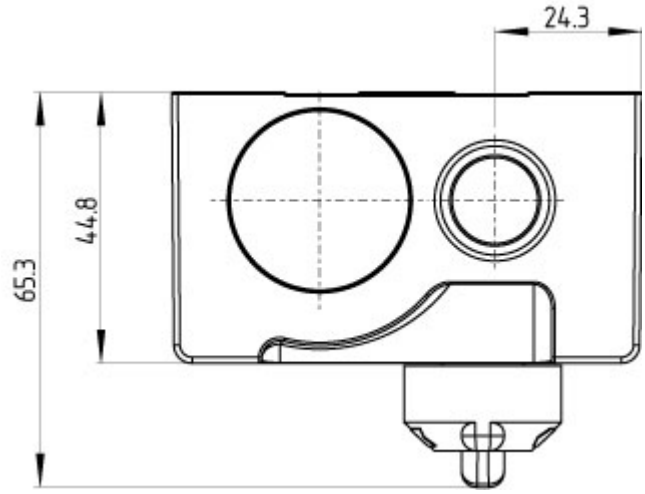

Dimensional drawing (basic component)

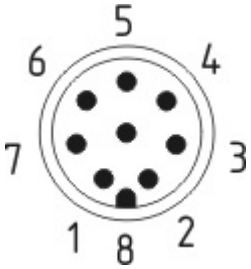

Contact arrangement

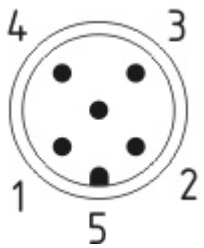

Contact arrangement

System components

Actuator

103003508 - AZM400-B1