Datasheet - IFL 10-180L-10/01P

Inductive proximity switch / Housing construction form: cylinder, thread / IFL - M18

☒ Preferred typ

(Minor differences between the printed image and the original product may exist!)

- Design M 18 x 1
- 1 Cable entry M 16 x 1.5
- Thermoplastic enclosure
- DC 3-wire
- Long design
- Double-insulated ⧈

Ordering details

Product type description	IFL 10-180L-10/01P
Article number	101126736
EAN Code	4030661117805
eCl@ss	27-27-01-01

Approval

Approval	CCC

Global Properties

Permanent light	IFL - M18
Standards	IEC/EN 60947-5-2; DIN VDE 0660-208
Compliance with the Directives (Y/N) CE	Yes
Operating resource protection class	Protection class 2
Materials	
- Material of the housings	Plastic
- Material of the nuts	Plastic
- Material of the washer	perbunan®
- Material of the active surface	Plastic
Housing coating	None
Housing construction form	cylinder, thread
Weight	45

Mechanical data

Design of electrical connection	Screw connection
Conductor with strain relief	No
Cable section	
- Min. Cable section	
- Max. Cable section	1 x 1.5
mechanical installation conditions	not flush
Switch distance S_n	10 mm
Reduction factor 1 met (Y/N)	No
Protection circuit	inductive interference protection, Protection against polarity reversal
Pressure resistant (Y/N)	No
Tightening torque for nuts	A/F 24 max. 300 Ncm
• Wiring compartment	

Ambient conditions

Ambient temperature	
- Min. environmental temperature	−25
- Max. environmental temperature	+70
Protection class	IP65 to IEC/EN 60529

Electrical data

Design of control element	Normally open contact (NO) or Opener (NC)
Number of wire	3
Voltage type	DC, direct current
Supply voltage U_B	
- Min. supply voltage	10
- Max. supply voltage	60
Switch frequency	approx. 350 HZ
Voltage drop U_d	approx. 1.5 V (400 mA)
Operating current I_e	400 mA
No-load current I_0	approx. 5.5 mA (24 V)

Outputs

Design of control output	PNP

LED switching conditions display

LED switching conditions display (Y/N)	Yes
- yellow LED	

ATEX

Explosion protection categories for gases	None
Explosion protected category for dusts	None

Dimensions

Dimensions of the sensor

- Length of sensor	125.6
- Diameter of sensor	M18

notice

Instead of nuts, a mounting clamp can be provided.
Programmable by repositioning the plug-in jumper at the terminal screws

Diagram

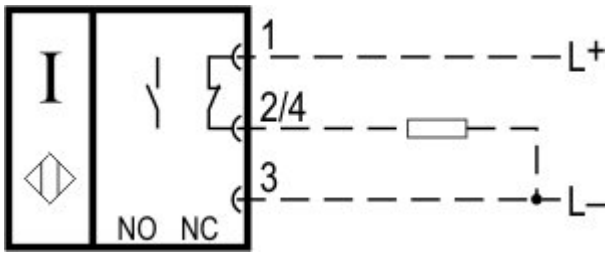

Note Diagram
positive break NC contact
active
no active
Normally-open contact
Normally-closed contact

Ordering suffix

The applicable ordering suffix is added at the end of the part number of the safety switch.
Order example: IFL 10-180L-10/01P**-1665-1**

...**-1665-1**	short-circuit and overload proof Operating current I_e: 300 mA Voltage drop U_d: approx. 1 V (300 mA)

Ordering code

IFL (1)-(2)(3)-(4)(5)(6)(7)-(8)

(1)	
5	Switch distance 5 mm
8	Switch distance 8 mm
10	Switch distance 10 mm
(2)	
18	cylinder, thread M18, Metal film
180	cylinder, thread M18, Plastic
(3)	
without	Included in standard version Design
M	miniature body
L	Long design
(4)	
01	Opener (NC)
10	Normally open contact (NO)
10/01	Normally open contact (NO) / Opener (NC) with Wiring compartment

11	Normally open contact (NO) / Opener (NC) antivalent
(5)	
without	Cable
ST	Connector
T	Conductor with strain relief
A	Alternating current/direct current AC/DC
D	DC 2-wire
(6)	
without	Included in standard version Plug-in connection
2	Alternative Plug-in connection
(7)	
N	n-type
P	p-type
(8)	
2033	Stainless steel enclosure
2130	Max. +130°C, without LED switching conditions display

Documents

Operating instructions (nl) 134 kB, 01.08.2018
Code: mrl_ifl-allgemein_nl

Operating instructions (en) 128 kB, 31.08.2016
Code: mrl_ifl-allgemein_en

Operating instructions (pl) 137 kB, 21.10.2016
Code: mrl_ifl-allgemein_pl

Operating instructions (pt) 109 kB, 06.04.2017
Code: mrl_ifl-allgemein_pt

Operating instructions (it) 108 kB, 21.10.2016
Code: mrl_ifl-allgemein_it

Operating instructions (es) 110 kB, 21.10.2016
Code: mrl_ifl-allgemein_es

Operating instructions (cn) 177 kB, 05.05.2017
Code: mrl_ifl-allgemein_cn

Operating instructions (de) 131 kB, 31.08.2016
Code: mrl_ifl-allgemein_de

Operating instructions (fr) 110 kB, 21.10.2016
Code: mrl_ifl-allgemein_fr

Declaration of conformity (en) 91 kB, 13.04.2017
Code: konfi_ifl_en

Declaration of conformity (de) 96 kB, 01.07.2016
Code: konfi_ifl_de

CCC certification (cn) 3 MB, 11.07.2018
Code: q_iflp03

CCC certification (en) 3 MB, 11.07.2018
Code: q_iflp02

Images

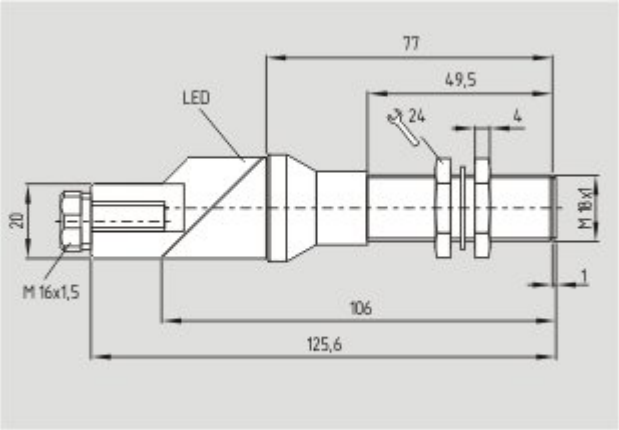

Dimensional drawing (basic component)

Operating principle

System components

Mounting accessories

101068879 - MOUNTING CLAMP H 18

• For a smooth fitting of the proximity switches with cylindric shape Ø 18 mm or thread M18