Datasheet - AES 7112.1

Guard door monitors and Safety control modules for Emergency Stop applications / Micro Processor based safety controllers (Series AES) / AES 7112

(Minor differences between the printed image and the original product may exist!)

- Monitoring of BNS range magnetic safety sensors
- 1 safety contact, STOP 0

Ordering details

Product type description	AES 7112.1
Article number	101115497
EAN Code	4030661058467
eCl@ss	27-37-19-01

Approval

Approval	BG USA/CAN

Classification

Standards	EN ISO 13849-1, IEC 61508
PL	up d
Control category	up 3
PFH value	1.0 x 10^{-7}/h
- notice	up to max. 50.000 switching cycles/year and at max. 80% contact load
SIL	up 2
Mission time	20 Years

Global Properties

Permanent light	AES 7112
Standards	IEC/EN 60204-1, IEC 60947-5-3, IEC 61508, BG-GS-ET-14, BG-GS-ET-20
Compliance with the Directives (Y/N) CE	Yes
Mounting	snaps onto standard DIN rail to EN 60715
Materials	
- Material of the housings	Plastic, glass-fibre reinforced thermoplastic, ventilated
- Material of the contacts	AgSn0
Weight	230
Start conditions	Automatic
Start input (Y/N)	No
Feedback circuit (Y/N)	No
Start-up test (Y/N)	No
Reset after disconnection of supply voltage (Y/N)	Yes
Automatic reset function (Y/N)	Yes
Reset with edge detection (Y/N)	No
Drop-out delay	
- Drop-out delay in case of emergency stop	< 50

Mechanical data

Connection type	Screw connection
Cable section	
- Max. Cable section	1.5
Pre-wired cable	rigid or flexible
Detachable terminals (Y/N)	No
Mechanical life	3.000.000 operations
Electrical lifetime	100.000 operations for 230 VAC, 5 A (cos φ = 1)
restistance to shock	30 g / 11 ms
Resistance to vibration To EN 60068-2-6	10…55 HZ, Amplitude 0,35 mm, ± 15 %

Ambient conditions

Ambient temperature	
- Min. environmental temperature	0
- Max. environmental temperature	+55
Storage and transport temperature	
- Min. Storage and transport temperature	−25
- Max. Storage and transport temperature	+70
Protection class	
- Protection class-Enclosure	IP40
- Protection class-Terminals	IP20
- Protection class-Clearance	IP54
Air clearances and creepage distances To IEC/EN 60664-1	
- Rated impulse withstand voltage U_{imp}	4.8 kV
- Overvoltage category	III To VDE 0110
- Degree of pollution	2 To VDE 0110

Electromagnetic compatibility (EMC)

EMC rating	conforming to EMC Directive

Electrical data

Rated DC voltage for controls	
- Max. rated DC voltage for controls	-
- Max. rated DC voltage for controls	-
Rated AC voltage for controls, 50 Hz	
- Min. rated AC voltage for controls, 50 Hz	93.5
- Max. rated AC voltage for controls, 50 Hz	121
Rated AC voltage for controls, 60 Hz	
- Min. rated AC voltage for controls, 60 Hz	93.5
- Max. rated AC voltage for controls, 60 Hz	121
Contact resistance	max. 100 mΩ
Power consumption	1.5
Type of actuation	AC
Switch frequency	10
Rated insulation voltage U_i	250 V
Rated operating voltage U_e	110 VAC
Thermal test current I_{the}	5 A
Operating current I_e	0,06 A
Electronic protection (Y/N)	No

Inputs

Monitored inputs	
- Short-circuit recognition (Y/N)	Yes
- Wire breakage detection (Y/N)	Yes
- Earth connection detection (Y/N)	No
Number of shutters	2 x 2
Number of openers	2 x 1
Input resistance	-
Input signal "1"	-
Input signal "0"	-
Cable length	100 m with 0,75 mm² (for Rated voltage)

Outputs

Stop category	0
Number of safety contacts	1
Number of auxiliary contacts	0
Number of signalling outputs	0
Switching capacity	
- Switching capacity of the safety contacts	max. 250 VAC, max. 5 A; min. >10 mA
Fuse rating	
- Protection of the safety contacts	5 A gG D-fuse
Utilisation category To EN 60947-5-1	AC-15: 250 V / 2 A DC-13: 24 V / 2 A
Number of undelayed semi-conductor outputs with signaling function	0
Number of undelayed outputs with signaling function (with contact)	0
Number of delayed semi-conductor outputs with signaling function.	0
Number of delayed outputs with signalling function (with contact).	0
Number of secure undelayed semi-conductor outputs with signaling function	0
Number of secure, undelayed outputs with signaling function, with contact.	0
Number of secure, delayed semi-conductor outputs with signaling function	0
Number of secure, delayed outputs with signaling function (with contact).	0

LED switching conditions display

LED switching conditions display (Y/N)	Yes
Number of LED´s	1
LED switching conditions display	
- The integrated LEDs indicate the following operating states.	
- Authorized operation	

Miscellaneous data

Applications	Safety sensor Guard system

Dimensions

Dimensions	
- Width	105 mm
- Height	96 mm
- Depth	58 mm

notice

Inductive loads (e.g. contactors, relays, etc.) are to be suppressed by means of a suitable circuit.

notice - Wiring example

To secure a guard door up to PL 1 and Category #03#

Monitoring 1 guard door(s), each with a magnetic safety sensor of the BNS range

Monitoring further guard doors:
Further magnetic safety sensors can be connected to S2 in a similar way to those on S1.

The wiring diagram is shown with guard doors closed and in de-energised condition.

Documents

Operating instructions and Declaration of conformity (pt) 238 kB, 23.01.2018
Code: mrl_aes6112-7112_pt

Operating instructions and Declaration of conformity (nl) 233 kB, 13.08.2018
Code: mrl_aes6112-7112_nl

Operating instructions and Declaration of conformity (es) 234 kB, 12.01.2018
Code: mrl_aes6112-7112_es

Operating instructions and Declaration of conformity (da) 206 kB, 11.07.2013
Code: mrl_aes6112-7112_da

Operating instructions and Declaration of conformity (it) 235 kB, 01.02.2018
Code: mrl_aes6112-7112_it

Operating instructions and Declaration of conformity (fr) 229 kB, 08.01.2018
Code: mrl_aes6112-7112_fr

Operating instructions and Declaration of conformity (de) 202 kB, 09.11.2017
Code: mrl_aes6112-7112_de

Operating instructions and Declaration of conformity (pl) 249 kB, 18.04.2018
Code: mrl_aes6112-7112_pl

Operating instructions and Declaration of conformity (jp) 569 kB, 11.11.2011
Code: mrl_aes6112-7112_jp

Operating instructions and Declaration of conformity (en) 234 kB, 09.11.2017
Code: mrl_aes6112-7112_en

Wiring example (99) 19 kB, 20.08.2008
Code: kaes7l01

BG-test certificate (de) 280 kB, 27.08.2018
Code: z_711p01

BG-test certificate (de) 673 kB, 20.08.2009
Code: z_711p01

BG-test certificate (en) 277 kB, 27.08.2018
Code: z_711p02

BG-test certificate (en) 659 kB, 20.08.2009
Code: z_711p02

EAC certification (ru) 1 MB, 15.03.2018
Code: q_aesp01

Images

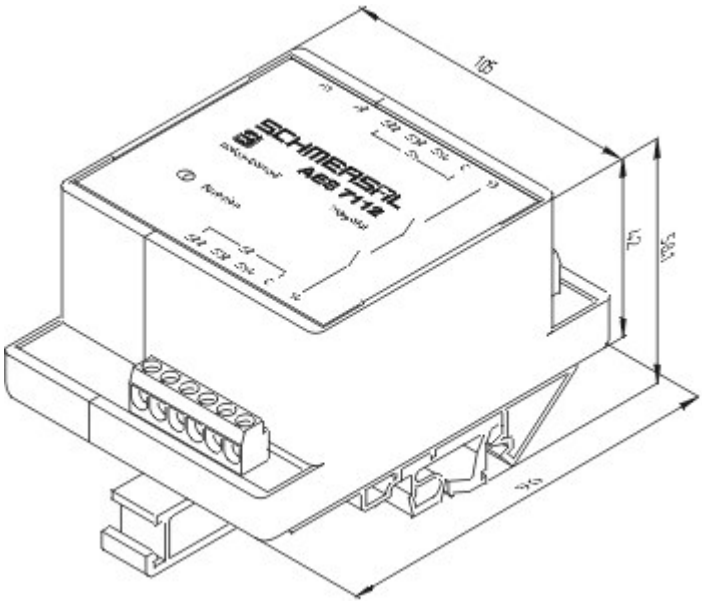

Dimensional drawing (basic component)

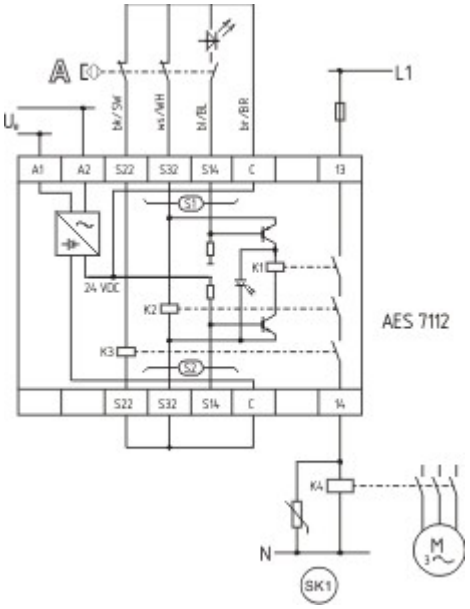

Wiring example