Datasheet - EX-TV12H 235-11ZUE-3D

Position switches with safety function / EX-235 Metal enclosure with Actuator / EX-235 Roller lever 12H

(Minor differences between the printed image and the original product may exist!)

- Ex certified
- Metal enclosure
- Wide range of alternative actuators
- Good resistance to oil and petroleum spirit
- 30 mm x 63,5 mm x 30 mm
- Actuator heads can be repositioned by 4 x 90°
- Mounting details to EN 50047
- Ex-certified screwed cable gland
- 1 Cable entry M 20 x 1.5
- Lever angle adjustable in 10° steps

Ordering details

Product type description	EX-TV12H 235-11ZUE-3D
Article number	EX-TV12H 235-11ZUE-3D
EAN Code	
eCl@ss	27-27-26-01

Approval

Approval	EEX

Classification

Standards	EN ISO 13849-1
B10d Normally-closed contact (NC)	20.000.000
Mission time	20 Years
notice	$MTTF_d = \frac{B_{10d}}{0,1 \times n_{op}}$ $n_{op} = \frac{d_{op} \times h_{op} \times 3600\ s/h}{t_{cycle}}$

Global Properties

Permanent light	EX-T 235 Rollenschwenkhebel 12H
Standards	EN 60947-5-1, EN 60079-0, EN 60079-15, EN 60079-31, BG-GS-ET-15

Compliance with the Directives (Y/N) CE	Yes
Suitable for safety functions (Y/N)	Yes
Actuator type	A to EN 50047
Materials	
- Material of the housings	Zink
- Lever material	Metal film
- Roller material	Plastic
- Material of the contacts	Silver
Housing coating	painted
Housing construction form	Norm construction design
Weight	

Mechanical data

Design of electrical connection	Screw connection
Cable cross-section of the cable glands	
- Min. Cable cross-section of the cable glands	6
- Max. Cable cross-section of the cable glands	12
Cable section	
- Min. Cable section	0,75
- Max. Cable section	2.5
AWG-Number	13
Mechanical life	20.000.000 operations
Switching frequency	max. 5000 /h
notice	All indications about the cable section are including the conductor ferrules.
Design of actuating element	Roller lever
actuating torque	min. 15 Ncm
Bounce duration	in accordance with actuating speed
Switchover time	in accordance with actuating speed
Positive break torque	18.5
Actuating speed with actuating angle 30° to switch axis	
- Min. Actuating speed	4122 mm/min
- Max. Actuating speed	1 m/s

Ambient conditions

Ambient temperature	
- Min. environmental temperature	−20
- Max. environmental temperature	+60
Protection class	IP67

Electrical data

Design of control element	Normally open contact (NO), Opener (NC)
Switching principle	Slow action with overlapping contacts
- positive break NC contact	
Number of auxiliary contacts	1
Number of safety contacts	1
Rated impulse withstand voltage U_{imp}	6 kV
Rated insulation voltage U_i	500 V
Thermal test current I_{the}	10 A
Utilisation category	AC-15: 230 V / 4 A, DC-13: 24 V / 1 A
Max. fuse rating	6 A gG D-fuse

ATEX

Marking	EX II 3D Ex tc IIIC T90°C Dc X EX II 3G Ex nC IIC T5 Gc X
Explosion protection categories for gases	3G
Explosion protection Zones for gases	2
Explosion protected category for dusts	3D
Explosion protection Zones for dusts	22

Dimensions

Dimensions of the sensor	
- Width of sensor	30
- Height of sensor	110.5
- Length of sensor	46

Keywords

Keywords	Ex, EEx, ATEX, Ex 235, Ex 235, 235 Ex, 235ex, 235ex, ATEX 235

Diagram

Note Diagram

positive break NC contact

active

no active

Normally-open contact

Normally-closed contact

Switch travel diagram

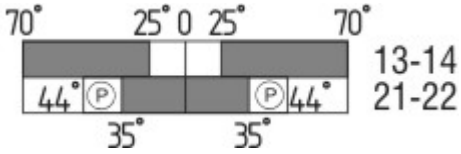

Notes Switch travel diagram

Contact closed

Contact open

Setting range

Break point

Positive opening sequence/- angle

VS adjustable range of NO contact
VÖ adjustable range of NC contact
N after travel

Ordering suffix

The applicable ordering suffix is added at the end of the part number of the safety switch.

Order example: EX-TV12H 235-11ZUE-3D-**Z**

...**-Z**	Actuator head gasket
...**-RMS**	Available with metal roller

Ordering code

EX-(1)(2) 235-(3)Z-(4)-(5)-(6)-(7)-3D

(1)	
Z	Snap action
T	Slow action
(2)	
S	Plunger S
R	Roller plunger R
4S	Plunger 4S
4R	Roller plunger 4R
1R	Offset roller lever 1R
K	Offset roller lever K
3K	Angle roller lever 3K
4K	Angle roller lever 4K
K4	Angle roller lever K4
1H	Roller lever 1H
7H	Roller lever 7H
10H	Rod lever 10H
12H	Roller lever 12H
14H	Roller lever 14H
(3)	
02	2 Opener (NC)
11	1 Normally open contact (NO) / 1 Opener (NC)
20	2 Normally open contact (NO), *(Switch with 2 NO contacts are not for security tasks)*
(4)	
H	Slow action with staggered contacts
UE	Slow action with overlapping contacts
(5)	
1297	Enclosure with transverse slotted holes
(6)	
2138	Roller lever 7H for Position switches with safety function
(7)	
1637	gold-plated contacts

Documents

Operating instructions and Declaration of conformity (pt) 360 kB, 24.01.2018

Code: mrl_ex-zt235_pt

Operating instructions and Declaration of conformity (pl) 379 kB, 31.01.2018

Code: mrl_ex-zt235_pl

Operating instructions and Declaration of conformity (nl) 355 kB, 31.01.2018
Code: mrl_ex-zt235_nl

Operating instructions and Declaration of conformity (jp) 435 kB, 10.02.2015
Code: mrl_ex-zt235_jp

Operating instructions and Declaration of conformity (da) 359 kB, 31.01.2018
Code: mrl_ex-zt235_da

Operating instructions and Declaration of conformity (es) 355 kB, 24.01.2018
Code: mrl_ex-zt235_es

Operating instructions and Declaration of conformity (it) 355 kB, 31.01.2018
Code: mrl_ex-zt235_it

Operating instructions and Declaration of conformity (de) 303 kB, 13.11.2017
Code: mrl_ex-zt235_de

Operating instructions and Declaration of conformity (en) 351 kB, 13.11.2017
Code: mrl_ex-zt235_en

Operating instructions and Declaration of conformity (fr) 360 kB, 31.01.2018
Code: mrl_ex-zt235_fr

Brochure (de) 7 MB, 19.10.2016
Code: b_atep01_de

Brochure (en) 7 MB, 19.10.2016
Code: b_atep01_en

Brochure (it) 3 MB, 20.07.2007
Code: b_atep05

Brochure (es) 5 MB, 18.08.2009
Code: b_atep09

Images

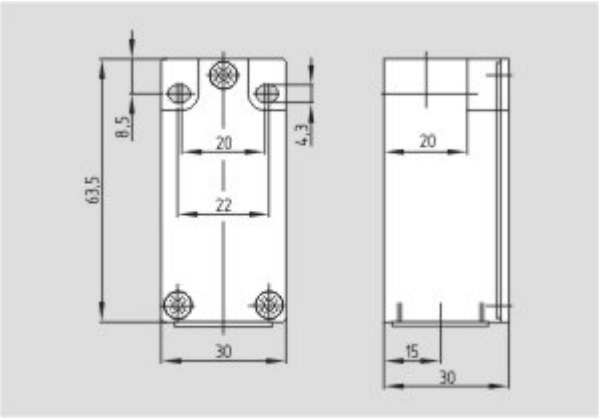

Dimensional drawing (basic component)

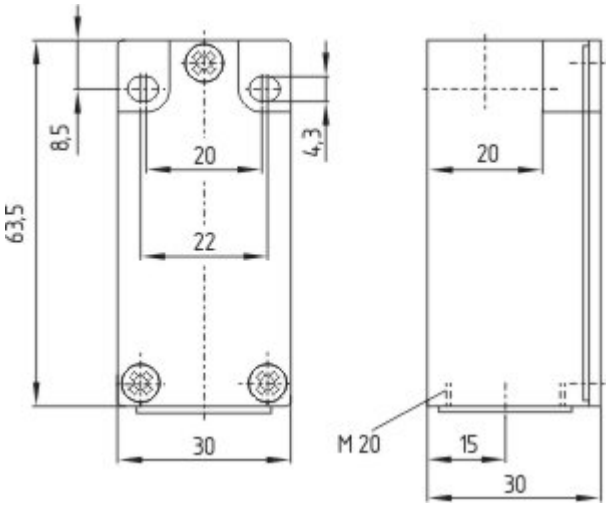

Dimensional drawing (basic component)

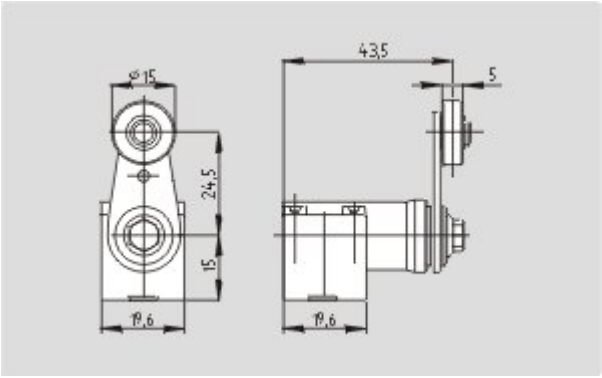

Dimensional drawing (actuator)

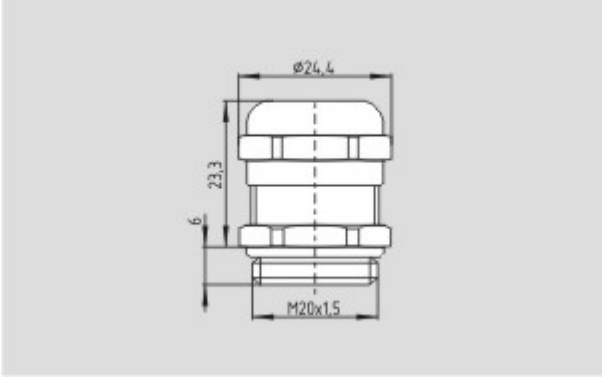

Dimensional drawing (miscellaneous)