Datasheet - MJ 064-30Y

Position switch / heavy Position switch / 064 / 064 Offset roller lever J

(Minor differences between the printed image and the original product may exist!)

- Metal enclosure
- 184 mm x 111 mm x 149 mm (basic component)
- 2 cable entries M 25 x 1.5
- 3 or 4 Contacts
- Actuator heads can be repositioned by 4 x 90°

Ordering details

Product type description	MJ 064-30Y
Article number	101056941
EAN Code	4030661022611
eCl@ss	27-27-06-01

Approval

Approval	CCC EAC

Global Properties

Permanent light	064 Rollenhebel J
Standards	EN 60947-5-1
Compliance with the Directives (Y/N) CE	Yes
Suitable for safety functions (Y/N)	No
Standard housing (Y/N)	No
Materials	
- Material of the housings	cast iron, galvanized
- Roller material	Plastic
- Material of the contacts	Silver
Housing coating	painted
Weight	3835
Slide form	Castor

Mechanical data

Design of electrical connection	Screw connection
Cable section	
- Min. Cable section	1.5
- Max. Cable section	4
AWG-Number	11
Active principle	mechanical
Mechanical life	30.000 operations
Switching frequency	max. 1000 /h
notice	All indications about the cable section are including the conductor ferrules.
Design of actuating element	Offset roller lever
Contact opening	2 x 4
Actuating speed with vertical actuating angle to switch axis	
- Min. Actuating speed	0,01 m/s
- Max. Actuating speed	1
- Actuating angle from left of switch axis	30
- Actuating angle from right of switch axis	45

Ambient conditions

Ambient temperature	
- Min. environmental temperature	−30
- Max. environmental temperature	+90
Protection class	IP65 to IEC/EN 60529

Electrical data

Design of control element	Normally open contact (NO)
- with double break	
- galvanically separated contact bridges	
Switching principle	Snap switch element
Number of shutters	3
Number of openers	0
Rated impulse withstand voltage U_{imp}	6 kV
Rated insulation voltage U_i	500 V
Thermal test current I_{the}	25 A
Utilisation category	AC-15: 400 V / 25 A
Max. fuse rating	16 A gL/gG D-fuse

Dimensions

Dimensions of the sensor	
- Width of sensor	
- Height of sensor	90
- Length of sensor	149
Roller wide	9
Roller diameter	36

notice

notice	**Actuation from the right should be avoided, since this reduces the mechanical life of the position switch.**

Diagram

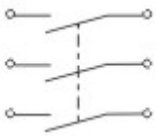

Note Diagram

positive break NC contact

active

no active

Normally-open contact

Normally-closed contact

Ordering suffix

The applicable ordering suffix is added at the end of the part number of the safety switch.
Order example: MJ 064-30Y**-RMS**

...**-RMS**	Available with metal roller

Ordering code

T(1) 064-(2)Y-(3)

(1)	
L	Roller lever L
A	Roller lever A
2A	Roller lever 2A
V	Roller lever V
Z	Pull lever Z
2Z	Pull lever 2Z
C	Fork lever C
4D	Offset roller lever 4D
(2)	
03	3 Opener (NC)
12	1 Normally open contact (NO) / 2 Opener (NC)
21	2 Normally open contact (NO) / 1 Opener (NC)
30	3 Normally open contact (NO)
01/02	1 Opener (NC) left / 2 Opener (NC) right
02/01	2 Opener (NC) left / 1 Opener (NC) right
10/20	1 Normally open contact (NO) left / 2 Normally open contact (NO) right
20/10	2 Normally open contact (NO) left / 1 Normally open contact (NO) right
(3)	
UE	Slow action with overlapping contacts
H	Slow action with staggered contacts
R	latching 2x45°

Documents

Operating instructions and Declaration of conformity (nl) 95 kB, 20.07.2018

Code: mrlk_posi-allgemein_nl

Operating instructions and Declaration of conformity (ru) 133 kB, 09.07.2018
Code: mrlk_posi-allgemein_ru

Operating instructions and Declaration of conformity (es) 88 kB, 09.07.2018
Code: mrlk_posi-allgemein_es

Operating instructions and Declaration of conformity (en) 86 kB, 09.07.2018
Code: mrlk_posi-allgemein_en

Operating instructions and Declaration of conformity (cn) 138 kB, 09.07.2018
Code: mrlk_posi-allgemein_cn

Operating instructions and Declaration of conformity (it) 86 kB, 09.07.2018
Code: mrlk_posi-allgemein_it

Operating instructions and Declaration of conformity (jp) 285 kB, 09.07.2018
Code: mrlk_posi-allgemein_jp

Operating instructions and Declaration of conformity (pl) 118 kB, 09.07.2018
Code: mrlk_posi-allgemein_pl

Operating instructions and Declaration of conformity (fr) 85 kB, 09.07.2018
Code: mrlk_posi-allgemein_fr

Operating instructions and Declaration of conformity (pt) 86 kB, 09.07.2018
Code: mrlk_posi-allgemein_pt

Operating instructions and Declaration of conformity (de) 88 kB, 09.07.2018
Code: mrlk_posi-allgemein_de

Declaration of conformity (en) 86 kB, 19.12.2018
Code: konfi_mrl_tm064_en

Declaration of conformity (de) 88 kB, 04.04.2017
Code: konfi_mrl_tm064_de

CCC certification (en) 1 MB, 24.07.2017
Code: q_355p02

CCC certification (cn) 1 MB, 24.07.2017
Code: q_355p03

EAC certification (ru) 388 kB, 20.01.2016
Code: q_1527p17_ru

Images

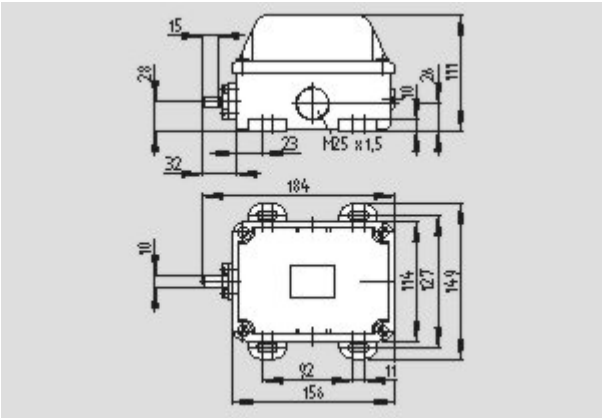

Dimensional drawing (basic component)

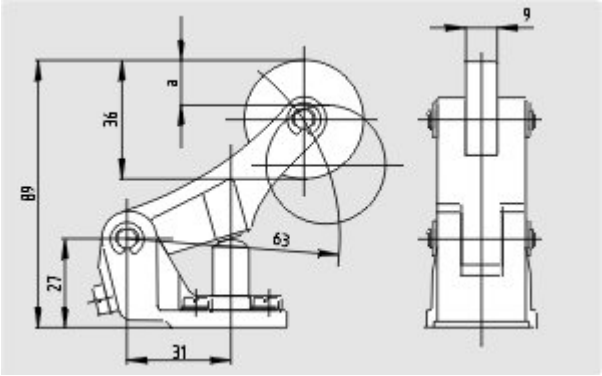

Dimensional drawing (miscellaneous)

Operating principle