Datasheet - SZ 415-2-2477

Solenoid interlock / AZM 415 / Door-handle system STS / Accessories / Lockout tag SZ 415

(Minor differences between the printed image and the original product may exist!)

- Suitable for mounting inside and outside of the hazardous area
- To prevent inadvertent closing, e.g. during maintenance
- For complex plant
- Prevents actuation of the switch
- Lockout tag with 5 circular holes

Ordering details

Product type description	SZ 415-2-2477
Article number	101178237
EAN Code	4030661310183
eCl@ss	27-27-92-91

Global Properties

Permanent light	Sperrzange SZ 415
Weight	100

Mechanical data

Door hinge	left

Images

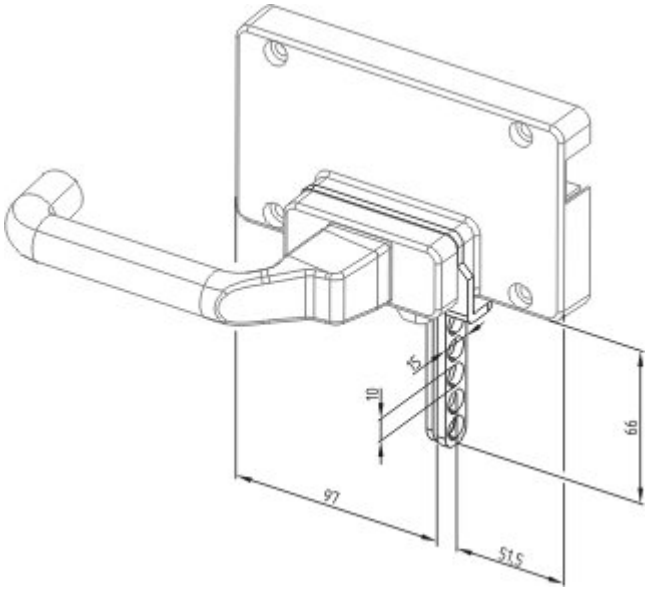

Dimensional drawing (miscellaneous)

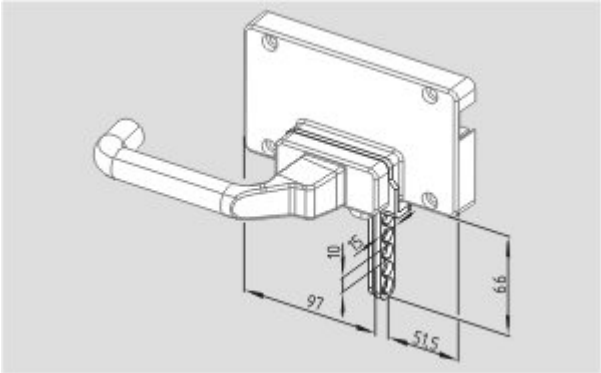

Dimensional drawing (miscellaneous)

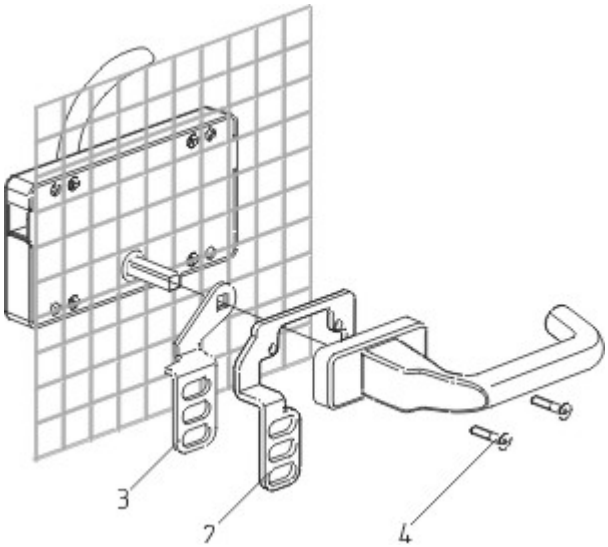

Assembly example

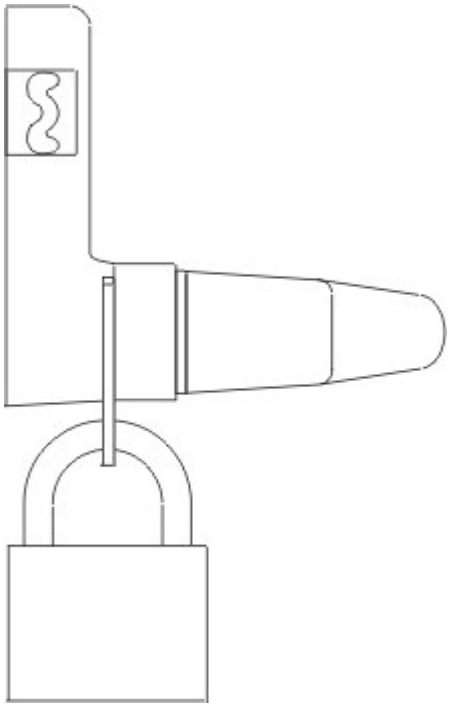

Operating principle