Datasheet - TV7H 256 STR-AS-2138

AS interface safety at work / Safety switchgear / Safety switches / 256 AS / AS - 256 Roller lever 7H-2138

(Minor differences between the printed image and the original product may exist!)

- Lever angle adjustable in 10° steps
- Thermoplastic enclosure
- AS-Interface M12 connector
- Wide range of alternative actuators
- Good resistance to oil and petroleum spirit
- 73,5 mm x 50,5 mm x 31 mm
- Actuator heads can be repositioned by 4 x 90°
- Mounting details to EN 50047
- AS-Interface LED and status display
- Integrated AS-Interface
- Suitable for AS-i Power24

Ordering details

Product type description	TV7H 256 STR-AS-2138
Article number	TV7H 256 STR -AS-2138
EAN Code	
eCl@ss	27-27-26-01

Approval

Approval	

Classification

Standards	EN ISO 13849-1, IEC 61508
PL	up c
Control category	up 1
PFH	1.14 x 10^{-6} /
- notice	up to max. 100000 switching cycles/year
SIL	up 1
Mission time	20 Years

If a fault exclusion for hazardous damage of the 1-channel mechanics is authorized and an adequate protection against tampering is ensured, suitable for use up to:

Standards	EN ISO 13849-1, IEC 61508
PL	up d
Control category	up 3
PFH value	1.01 x 10^{-7} /
- notice	up to max. 100000 switching cycles/year
SIL	up 2
Mission time	20 Years

Global Properties

Permanent light	AS - Rollenschwenkhebel 7H 256-2138
Standards	EN 50295, EN 60947-5-1, EN ISO 13849-1, IEC 61508
Compliance with the Directives (Y/N) CE	Yes
Suitable for safety functions (Y/N)	Yes
Materials	
- Material of the housings	Plastic, glass-fibre reinforced thermoplastic, self-extinguishing
- Lever material	Metal film
- Roller material	Plastic
- Material of the connector	Plastic
- Material of the contacts	Silver
Housing coating	
Housing construction form	Norm construction design
Weight	

Mechanical data

Design of electrical connection	connector plug M12, 4-pole
connector	right
Mechanical life	1.000.000 operations
Switching frequency	5000
Design of actuating element	Roller lever
actuating torque	15
restistance to shock	30 / 11
Resistance to vibration	10 … 150, Amplitude 0,35 / 5
Positive break torque	18.5
Actuating speed for vertical actuation	
- Max. Actuating speed	1

Ambient conditions

Ambient temperature	
- Min. environmental temperature	−25
- Max. environmental temperature	+60
- Min. Storage and transport temperature	−25
- Max. Storage and transport temperature	+85
Relative humidity	30 … 95
- non-condensing	
- non-icing	
Protection class	IP67 to IEC/EN 60529
Protection rating	II

Electrical data

Design of control element	Opener (NC)

Switching principle	Creep circuit element
- positive break NC contact	
Number of auxiliary contacts	0
Number of safety contacts	2
Rated impulse withstand voltage	800
Rated insulation voltage	32
Thermal test current	10 A
Utilisation category	AC-15: 230 V / 4 A, DC-13: 24 V / 1 A
Max. fuse rating	6 A gG D-fuse

Electrical data - AS interface

AS-i Supply voltage	18 … 31.6 VDC, Protection against polarity reversal
AS-i operating current	≤ 50
AS-i Device insulation	internally short-circuit proof
AS-i Specification	
- version	V 3.0
- Profile	S-0.B.F.F
AS-i Inputs	
- Channel 1	Data bits DI 0/DI 1= dynamic code transmission
- Channel 2	Data bits DI 2/DI 3= dynamic code transmission
AS-i Outputs	DO 0 … DO 3 not used
AS-i Parameter bits	P1 … P3 not used
- P0	Channel 2 switched
AS-i input module address	0
- Default on address 0, programmable via the AS-Interface Master or Hand-held programming device	

LED switching conditions display

LED switching conditions display (Y/N)	Yes
AS-i LED switching conditions display	
(1) yellow LED	Channel 1 / AS-i SaW Bit 0,1
(2) green/red LED (AS-i duo LED)	Supply voltage / Communication error / slave address = 0
(3) yellow LED	Channel 2 / AS-i SaW Bit 2,3

ATEX

Explosion protection categories for gases	None
Explosion protected category for dusts	None

Dimensions

Dimensions of the sensor	
- Width of sensor	73.5
- Height of sensor	145.5
- Length of sensor	31

Pin assignment

1	AS interface +
2	None
3	AS interface −
4	None

5	Functional earth connection

Switch travel diagram

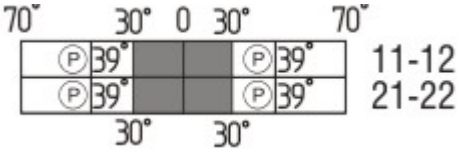

Notes Switch travel diagram

Contact closed

Contact open

Setting range

Break point

Positive opening sequence/- angle

VS adjustable range of NO contact

VÖ adjustable range of NC contact

N after travel

Ordering suffix

The applicable ordering suffix is added at the end of the part number of the safety switch.

Order example: TV7H 256 STR-AS-2138**-STL**

...**-STL**	connector plug M12, left
...**-FKR**	Connection for flat cable, right
...**-FKL**	Connection for flat cable, left
...**-Z**	Actuator head gasket

Ordering code

(1)(2) 256 (3)-AS

(1)

Z	Snap action
T	Slow action

(2)

S	Plunger S
R	Roller plunger R
1R	Offset roller lever 1R
K	Angle roller lever K
3K	Angle roller lever 3K
4K	Angle roller lever 4K
K4	Angle roller lever K4
1H	Roller lever 1H
12H	Roller lever 12H
14H	Roller lever 14H
7H	Roller lever 7H

(3)

STR	connector plug M12 right
STL	connector plug M12, left
FKR	Connection for flat cable, right
FKL	Flat plug-in connector, left

Documents

Operating instructions and Declaration of conformity (it) 309 kB, 09.10.2018
Code: mrl_zt235-236as_it

Operating instructions and Declaration of conformity (pt) 314 kB, 09.10.2018
Code: mrl_zt235-236as_pt

Operating instructions and Declaration of conformity (de) 320 kB, 09.10.2018
Code: mrl_zt235-236as_de

Operating instructions and Declaration of conformity (es) 312 kB, 09.10.2018
Code: mrl_zt235-236as_es

Operating instructions and Declaration of conformity (da) 301 kB, 09.10.2018
Code: mrl_zt235-236as_da

Operating instructions and Declaration of conformity (nl) 346 kB, 09.10.2018
Code: mrl_zt235-236as_nl

Operating instructions and Declaration of conformity (en) 313 kB, 09.10.2018
Code: mrl_zt235-236as_en

Operating instructions and Declaration of conformity (fr) 314 kB, 09.10.2018
Code: mrl_zt235-236as_fr

Operating instructions and Declaration of conformity (jp) 422 kB, 09.10.2018
Code: mrl_zt235-236as_jp

Operating instructions and Declaration of conformity (pl) 327 kB, 09.10.2018
Code: mrl_zt235-236as_pl

TÜV certification (de, en) 249 kB, 20.01.2017
Code: z_235p03

Images

Product photo

Product photo

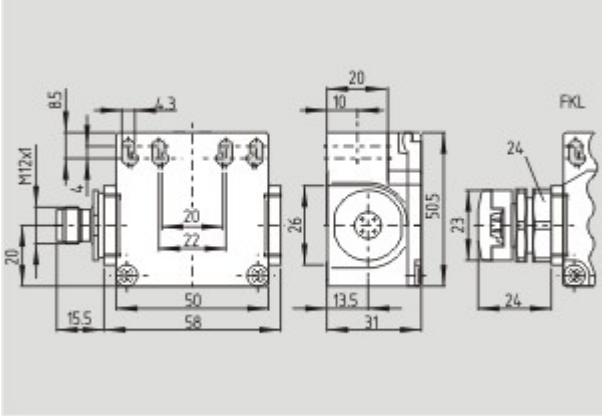

Dimensional drawing (basic component)

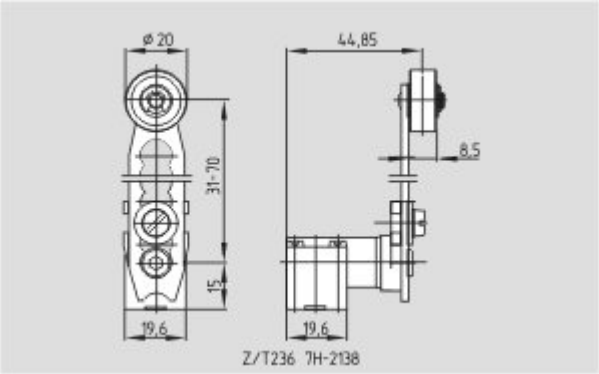

Dimensional drawing (actuator)

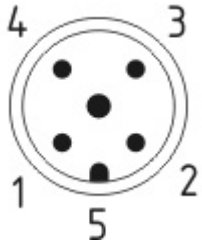

Contact arrangement

K.A. Schmersal GmbH & Co. KG, Möddinghofe 30, D-42279 Wuppertal
The data and values have been checked throroughly. Technical modifications and errors excepted.
Generiert am 13.02.2019 - 12:42:30h Kasbase 3.3.0.F.64I