Datasheet - T3K 336-20ZH

Position switch / 336 Thermoplastic enclosure - EN 50041 with Actuator / 336 Angle roller lever 3K

(Minor differences between the printed image and the original product may exist!)

- Design to EN 50041
- Actuation from bottom parallel to the switch, therefore only suitable for small housings.
- Thermoplastic enclosure
- Double-insulated ⧈
- Good resistance to oil and petroleum spirit
- Wide range of alternative actuators
- Actuator heads can be repositioned by 4 x 90°
- slim design
- 1 Cable entry M 20 x 1.5

Ordering details

Product type description	T3K 336-20ZH
Article number	101095188
EAN Code	
eCl@ss	27-27-26-01

Approval

Approval	USA/CAN CCC EAC

Classification

Standards	EN ISO 13849-1
B_{10d} Normally open contact (NO)	1 million operations
Mission time TM	20 Years
notice	$MTTF_d = \frac{B_{10d}}{0{,}1 \times n_{op}}$ $n_{op} = \frac{d_{op} \times h_{op} \times 3600\ s/h}{t_{cycle}}$

Global Properties

Permanent light	336 Winkelhebel 3K
Standards	EN 60947-5-1, BG-GS-ET-15
Compliance with the Directives (Y/N) CE	Yes
Suitable for safety functions (Y/N)	No
Materials	
- Material of the housings	Plastic, glass-fibre reinforced thermoplastic, self-extinguishing
- Material of the contacts	Silver
Housing coating	None
Housing construction form	Norm construction design
Weight	140

Mechanical data

Design of electrical connection	Screw connection
Cable section	
- Min. Cable section	0,75
- Max. Cable section	2.5
Mechanical life	30.000.000 operations
Switching frequency	max. 5000 /h
notice	All indications about the cable section are including the conductor ferrules.
Design of actuating element	Angle roller lever
Actuating force	min. 17 N
Bounce duration	< 2
Switchover time	in accordance with actuating speed
Actuating speed with actuating angle 30° to switch axis	
- Min. Actuating speed	
- Max. Actuating speed	0,5 m/s

Ambient conditions

Ambient temperature	
- Min. environmental temperature	−30 °C
- Max. environmental temperature	+80 °C
Protection class	IP67

Electrical data

Design of control element	Normally open contact (NO)
Switching principle	Slow action with staggered contacts
Number of auxiliary contacts	2
Number of safety contacts	0
Rated impulse withstand voltage U_{imp}	6 kV
Rated insulation voltage U_i	500 V
Thermal test current I_{the}	10 A
Utilisation category	AC-15: 230 V / 4 A, DC-13: 24 V / 4 A
Required rated short-circuit current	1000 A
Max. fuse rating	6 A gG D-fuse

Dimensions

Dimensions of the sensor	
- Width of sensor	53 mm

- Height of sensor	121.5 mm
- Length of sensor	38 mm

notice

Switch with 2 NO contacts are not for security tasks

Diagram

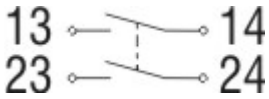

Note Diagram

positive break NC contact

active

no active

Normally-open contact

Normally-closed contact

Switch travel diagram

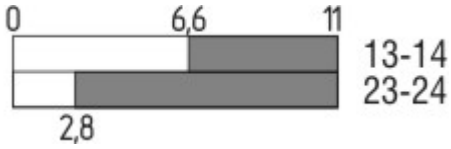

Notes Switch travel diagram

Contact closed

Contact open

Setting range

Break point

Positive opening sequence/- angle

VS adjustable range of NO contact
VÖ adjustable range of NC contact
N after travel

Ordering suffix

The applicable ordering suffix is added at the end of the part number of the safety switch.
Order example: T3K 336-20ZH-**NPT**

...**-NPT**	Cable entry NPT 1/2“
...**-1637**	0,3 µm gold-plated contacts
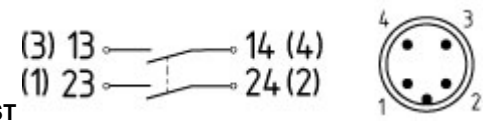 ...**-ST**	M12 connector with A-coding Rated impulse withstand voltage U_{imp}: 0,8 kV Rated insulation voltage U_i: 50 V Operating current I_e: AC-15 50 V / 4 A Caution! The versions with connector may only be used in PELV circuits to EN 60204-1.
	M12 connector with B-coding

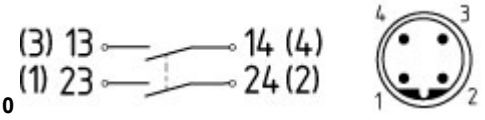

...-2310

Rated impulse withstand voltage U_{imp}: 0,8 kV
Rated insulation voltage U_i: 50 V
Operating current I_e: AC-15 50 V / 4 A
Caution! The versions with connector may only be used in PELV circuits to EN 60204-1.

Ordering code

(1)(2) 336-(3)Z(4)-(5)-(6)-(7)

(1)	
Z	Snap action
T	Slow action
(2)	
S	Plunger S
R	Roller plunger R
H	Roller lever H
10H	Rod lever 10H
7H	Roller lever 7H
1K	Offset roller lever 1K
3K	Angle roller lever 3K
(3)	
11	1 Normally open contact (NO) / 1 Opener (NC)
02	2 Opener (NC)
20	2 Normally open contact (NO), *(Switch with 2 NO contacts are not for security tasks)*
01/01	1 Opener (NC) left / 1 Opener (NC) right
(4)	
H	Slow action with staggered contacts
UE	Slow action with overlapping contacts
(5)	
without	Cable entry M20
NPT	cable entry NPT 1/2"
ST	M12 connector with A-coding
ST-2310	M12 connector with B-coding
(6)	
2138	Roller lever 7H for Position switches with safety function
(7)	
1637	gold-plated contacts

Documents

Operating instructions and Declaration of conformity (de) 157 kB, 18.06.2018
Code: mrlk_zt332-335-336-355_de

Operating instructions and Declaration of conformity (nl) 162 kB, 27.06.2018
Code: mrlk_zt332-335-336-355_nl

Operating instructions and Declaration of conformity (it) 162 kB, 27.06.2018
Code: mrlk_zt332-335-336-355_it

Operating instructions and Declaration of conformity (pt) 163 kB, 27.06.2018

Code: mrlk_zt332-335-336-355_pt

Operating instructions and Declaration of conformity (pl) 198 kB, 27.06.2018
Code: mrlk_zt332-335-336-355_pl

Operating instructions and Declaration of conformity (en) 160 kB, 18.06.2018
Code: mrlk_zt332-335-336-355_en

Operating instructions and Declaration of conformity (fr) 164 kB, 27.06.2018
Code: mrlk_zt332-335-336-355_fr

Declaration of conformity (es) 91 kB, 18.06.2018
Code: KAS_konfi_nsr_zt2xx-3xx_es

Declaration of conformity (pl) 130 kB, 18.06.2018
Code: KAS_konfi_nsr_zt2xx-3xx_pl

Declaration of conformity (it) 89 kB, 18.06.2018
Code: KAS_konfi_nsr_zt2xx-3xx_it

Declaration of conformity (pt) 90 kB, 18.06.2018
Code: KAS_konfi_nsr_zt2xx-3xx_pt

Declaration of conformity (fr) 89 kB, 18.06.2018
Code: KAS_konfi_nsr_zt2xx-3xx_fr

Declaration of conformity (de) 581 kB, 07.06.2018
Code: KAS_konfi_nsr_zt2xx-3xx_de

Declaration of conformity (en) 579 kB, 07.06.2018
Code: KAS_konfi_nsr_zt2xx-3xx_en

Declaration of conformity (nl) 89 kB, 18.06.2018
Code: KAS_konfi_nsr_zt2xx-3xx_nl

CCC certification (en) 187 kB, 03.08.2015
Code: q_347p02

CCC certification (cn) 166 kB, 03.08.2015
Code: q_347p03

EAC certification (ru) 844 kB, 05.10.2015
Code: q_6037p17_ru

Images

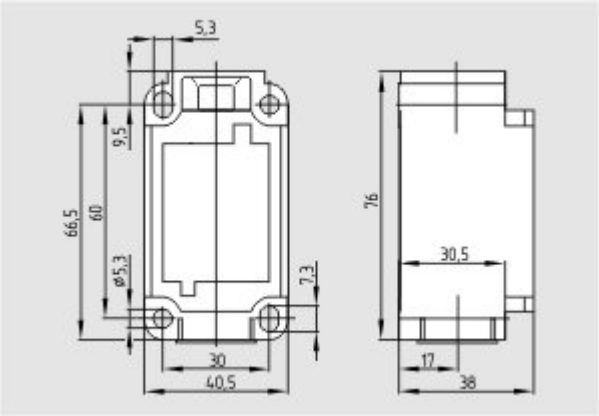

Dimensional drawing (basic component)

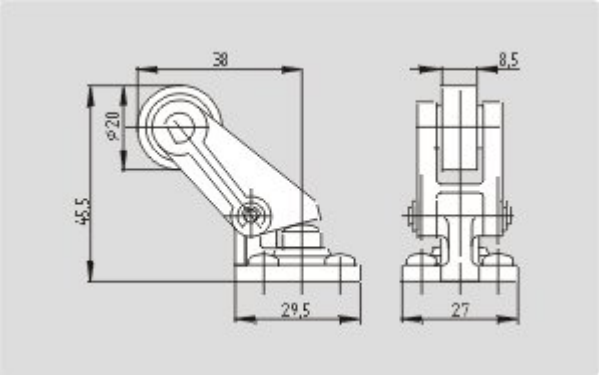

Dimensional drawing (actuator)