Datasheet - EX-T4VH335-02Y

Position switches with safety function / EX-T335 Metal enclosure with Actuator / EX-T 335 Roller lever H

(Minor differences between the printed image and the original product may exist!)

- Explosion protection for ATEX Zones 1 and 21
- Metal enclosure
- Wide range of alternative actuators
- Good resistance to oil and petroleum spirit
- 40,5 mm x 76 mm x 38 mm
- Actuator heads can be repositioned by 4 x 90°
- Ex-certified screwed cable gland
- Mounting details to EN 50041
- 1 Cable entry M 20 x 1.5
- Ex certified

Ordering details

Product type description	EX-T4VH335-02Y
Article number	101212057
EAN Code	
eCl@ss	27-27-26-01

Approval

Approval	ATEX IECEx INMETRO

Classification

Standards	EN ISO 13849-1
B10d Normally-closed contact (NC)	20.000.000
Mission time	20 Years
notice	$MTTF_d = \frac{B_{10d}}{0,1 \times n_{op}}$ $n_{op} = \frac{d_{op} \times h_{op} \times 3600\ s/h}{t_{cycle}}$

Global Properties

Permanent light	EX-T335 Rollenschwenkhebel H

Standards	EN 60079-0, EN 60079-1, EN 60079-7, EN 60079-31, EN 60947-5-1, BG-GS-ET-15
Compliance with the Directives (Y/N) CE	Yes
Suitable for safety functions (Y/N)	Yes
Actuator type	A to EN 50041
Materials	
- Material of the housings	zinc die-cast
- Lever material	Metal film
- Roller material	Plastic
- Material of the contacts	Silver
Housing coating	painted
Housing construction form	Norm construction design
Weight	400

Mechanical data

Design of electrical connection	Screw connection
Cable cross-section of the cable glands	
- Min. Cable cross-section of the cable glands	7
- Max. Cable cross-section of the cable glands	12
Cable section	
- Min. Cable section	1
- Max. Cable section	2.5
AWG-Number	13
Mechanical life	> 1.000.000 operations
Switching frequency	1800
notice	All indications about the cable section are including the conductor ferrules.
Design of actuating element	Roller lever
actuating torque	31
Bounce duration	< 3
Switchover time	in accordance with actuating speed
Impact energy	7
Actuating speed with actuating angle 30° to switch axis	
- Min. Actuating speed	
- Max. Actuating speed	2.5

Ambient conditions

Ambient temperature	
- Min. environmental temperature	−20
- Max. environmental temperature	+55 °C at Cable section 2.5 +50 °C at Cable section 1 mm
Protection class	IP65

Electrical data

Design of control element	Opener (NC)
Switching principle	Slow action
- positive break NC contact	
Number of auxiliary contacts	0
Number of safety contacts	2
Rated impulse withstand voltage	4
Rated insulation voltage	250

Thermal test current	5 A
Utilisation category	AC-1
Max. fuse rating	6 A gG D-fuse

ATEX

EX-marking	EX II 2D Ex tb IIIC T80°C Db EX II 2G Ex d e IIC T6 Gb
Explosion protection categories for gases	2G
Explosion protection Zones for gases	1
Explosion protected category for dusts	2D
Explosion protection Zones for dusts	21

Dimensions

Dimensions of the sensor	
- Width of sensor	40.5
- Height of sensor	134
- Length of sensor	60.55

Keywords

Keywords	Ex, EEx, ATEX, Ex 235, Ex 235, 235 Ex, 235ex, 235ex, ATEX 235

Switch travel diagram

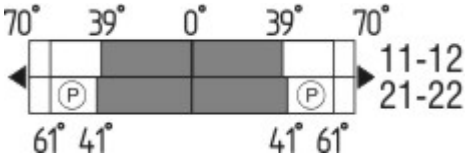

Notes Switch travel diagram

Contact closed

Contact open

Setting range

Break point

Positive opening sequence/- angle

VS adjustable range of NO contact
VÖ adjustable range of NC contact
N after travel

Ordering code

EX-T(1) 335-(2)Y(3)-(4)-(5)

(1)

S	Plunger S
R	Roller plunger R
H	Roller lever H
10H	Rod lever 10H
7H	Roller lever 7H
7H-2138	Roller lever 7H for Position switches with safety function
1K	Offset roller lever 1K
3K	Angle roller lever 3K

(2)	
11	1 Normally open contact (NO) / 1 Opener (NC)
02	2 Opener (NC)
20	2 Normally open contact (NO) *(Switch with 2 NO contacts are not for security tasks)*
(3)	
UE	Slow action with overlapping contacts
without	Slow action with staggered contacts
(4)	
2138	Roller lever 7H for Position switches with safety function
(5)	
RMS	Castor aus Brass

Documents

Operating instructions and Declaration of conformity (pl) 403 kB, 06.12.2018
Code: mrl_ext335_pl

Operating instructions and Declaration of conformity (jp) 493 kB, 23.01.2018
Code: mrl_ext335_jp

Operating instructions and Declaration of conformity (en) 347 kB, 24.03.2014
Code: mrl_ext335_en

Operating instructions and Declaration of conformity (en) 481 kB, 16.11.2011
Code: mrl_ext335_en

Operating instructions and Declaration of conformity (en) 385 kB, 25.10.2018
Code: mrl_ext335_en

Operating instructions and Declaration of conformity (pt) 389 kB, 25.10.2018
Code: mrl_ext335_pt

Operating instructions and Declaration of conformity (it) 381 kB, 23.01.2018
Code: mrl_ext335_it

Operating instructions and Declaration of conformity (fr) 389 kB, 06.12.2018
Code: mrl_ext335_fr

Operating instructions and Declaration of conformity (de) 351 kB, 25.10.2018
Code: mrl_ext335_de

Operating instructions and Declaration of conformity (de) 481 kB, 10.11.2011
Code: mrl_ext335_de

Operating instructions and Declaration of conformity (es) 387 kB, 06.12.2018
Code: mrl_ext335_es

Operating instructions and Declaration of conformity (nl) 383 kB, 12.11.2018
Code: mrl_ext335_nl

Operating instructions and Declaration of conformity (br) 390 kB, 25.10.2018
Code: mrl_ext335_br

Operating instructions and Declaration of conformity (sv) 389 kB, 25.10.2018

Code: mrl_ext335_pt

BG-test certificate (en) 483 kB, 26.11.2018
Code: z_ex-p02

BG-test certificate (de) 476 kB, 26.11.2018
Code: z_ex-p01

INMETRO certification (br) 533 kB, 24.07.2017
Code: q_ex-p04

IECEx certification (en) 141 kB, 26.11.2018
Code: p_exp01

Images

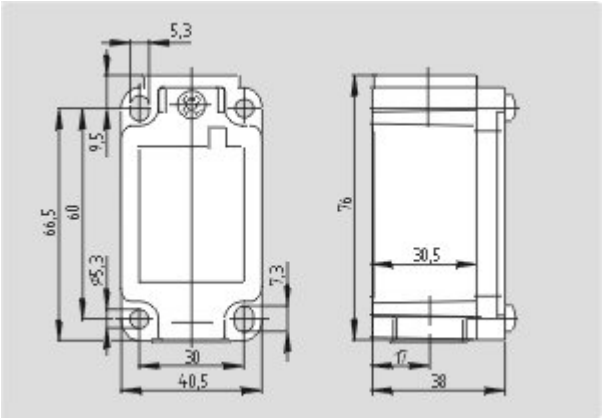

Dimensional drawing (basic component)

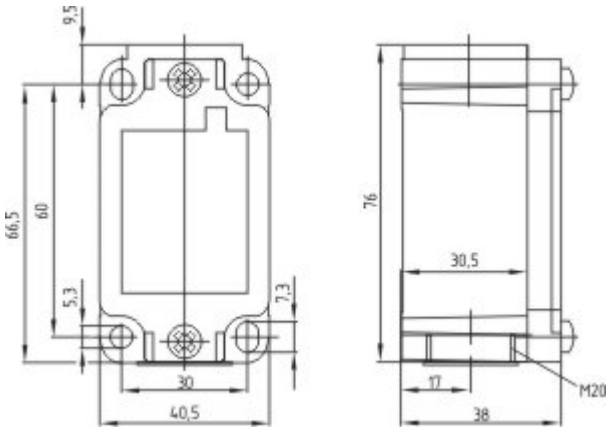

Dimensional drawing (basic component)

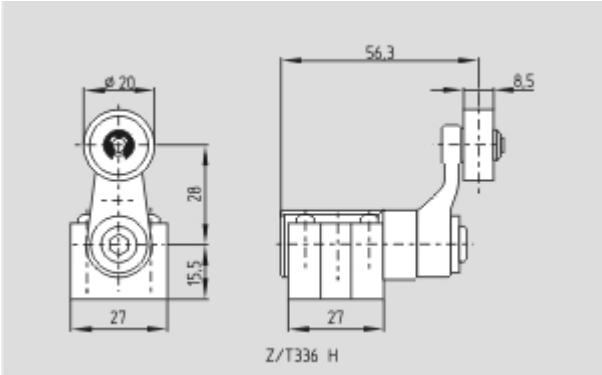

Dimensional drawing (actuator)

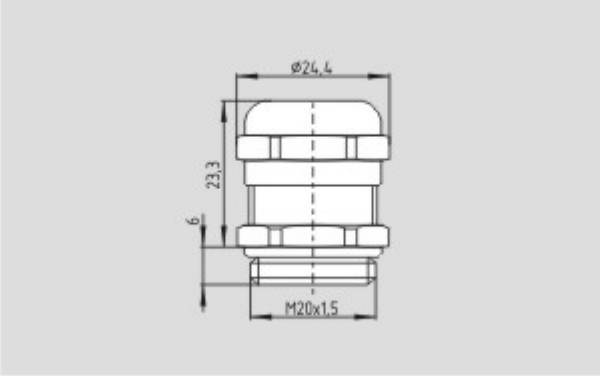

Dimensional drawing (miscellaneous)

K.A. Schmersal GmbH & Co. KG, Möddinghofe 30, D-42279 Wuppertal
The data and values have been checked throroughly. Technical modifications and errors excepted.
Generiert am 13.02.2019 - 14:11:39h Kasbase 3.3.0.F.64I