Vision Sensor

B50S101

Part Number

weQubeVision

- **Image processing functions**
- **MultiCore technology**

The vision sensor weQubeVision is based on the wenglor MultiCore technology. The functions autofocus, region of interest and tracking ensure optimal object detection. The following image processing modules are available: Dimensional accuracy check, sorting procedures, presence control, object counting, position output, pixel counting, filter options, and statistics evaluation.

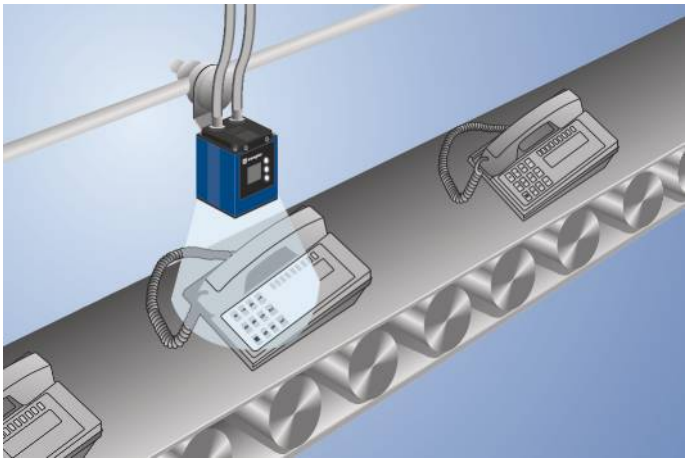

Technical Data

Optical Data	
Working Range	≥ 20 mm
Resolution	736 × 480 Pixel
Image Chip	monochrome
Light Source	White Light
Service Life (T = +25 °C)	100000 h
Visual Field	see Table 1
Frame Rate	25 Hz
Electrical Data	
Supply Voltage	18...30 V DC
Current Consumption (Ub = 24 V)	< 200 mA
Response Time	40 ms
Temperature Range	-25...55 °C*
Inputs/Outputs	6
Switching Output Voltage Drop	< 2,5 V
Switching Output/Switching Current	100 mA
Short Circuit Protection	yes
Reverse Polarity Protection	yes
Interface	RS-232/Ethernet
Protection Class	III
Mechanical Data	
Setting Method	Ethernet
Housing Material	Aluminum
Degree of Protection	IP67
Connection	M12 × 1; 12-pin
Type of Connection Ethernet	M12 × 1; 8-pin, X-cod.
Safety-relevant Data	
MTTFd (EN ISO 13849-1)	227,7 a
Function	
Presence Check	yes
Pixel Comparison	yes
Reference Image Comparison	yes
Tracking	yes
Object detection	yes
Dimensional accuracy check	yes
Web server	yes
Configurable as PNP/NPN/Push-Pull	●
Switchable to NC/NO	●
Illumination Output	●
RS-232 Interface	●
Ethernet	●
PROFINET	●
EtherNet/IP™	●
Connection Diagram No.	002, 1008
Control Panel No.	X2
Suitable Connection Technology No.	50, 87
Suitable Mounting Technology No.	560

Display brightness may decrease with age. This does not result in any impairment of the sensor function.
* -25° C: Ambient conditions should not result in condensation; avoid the formation of ice on the front panel!
55° C: Continuous illumination at max. 1% or flash mode at 100% brightness with an exposure time of ≤ 5 ms; may affect the service life of the product.

Complementary Products

Disk with Polarization Filter ZNNG004
Illumination Technology
License Upgrade, weQube Pattern Matching DNNL006
Protective Housing ZNNS001, ZNNS002
Software
weQubeDecode License Upgrade DNNL002
weQubeOCR License Upgrade DNNL003

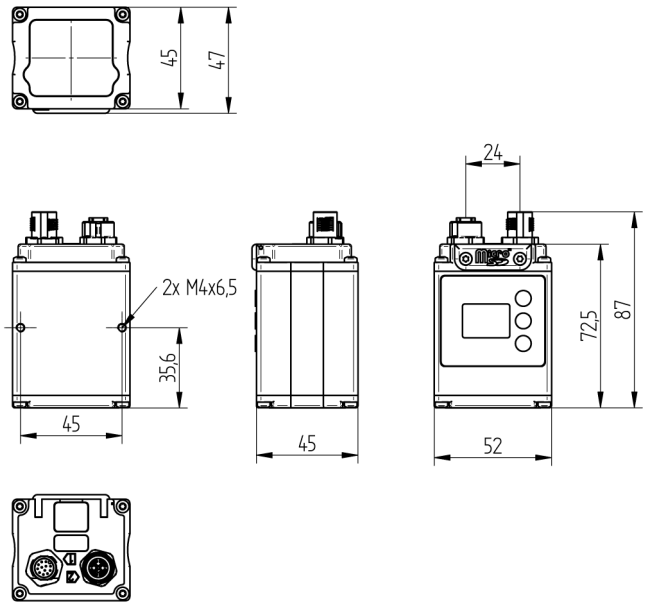

All dimensions in mm (1 mm = 0.03937 Inch)

Ctrl. Panel

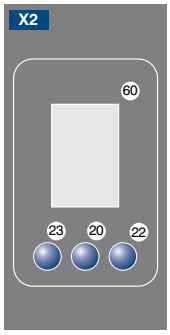

20 = Enter Button
22 = UP Button
23 = Down Button
60 = Display

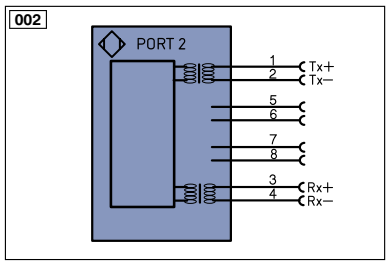

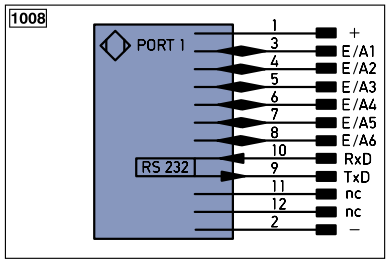

Legend

+	Supply Voltage +
–	Supply Voltage 0 V
~	Supply Voltage (AC Voltage)
A	Switching Output (NO)
Ā	Switching Output (NC)
V	Contamination/Error Output (NO)
V̄	Contamination/Error Output (NC)
E	Input (analog or digital)
T	Teach Input
Z	Time Delay (activation)
S	Shielding
RxD	Interface Receive Path
TxD	Interface Send Path
RDY	Ready
GND	Ground
CL	Clock
E/A	Output/Input programmable
	IO-Link
PoE	Power over Ethernet
IN	Safety Input
OSSD	Safety Output
Bl_D+/-	Ethernet Gigabit bidirect. data line (A-D)
EN0 RS422	Encoder 0-pulse 0-0̄ (TTL)
PT	Platinum measuring resistor
nc	not connected
U	Test Input
Ū	Test Input inverted
W	Trigger Input
O	Analog Output
O–	Ground for the Analog Output
BZ	Block Discharge
AMV	Valve Output
a	Valve Control Output +
b	Valve Control Output 0 V
SY	Synchronization
E+	Receiver-Line
S+	Emitter-Line
⏚	Grounding
SnR	Switching Distance Reduction
Rx+/–	Ethernet Receive Path
Tx+/–	Ethernet Send Path
Bus	Interfaces-Bus A(+)/B(–)
La	Emitted Light disengageable
Mag	Magnet activation
RES	Input confirmation
EDM	Contactor Monitoring
ENA RS422	Encoder A/Ā (TTL)
ENB RS422	Encoder B/B̄ (TTL)
ENA	Encoder A
ENB	Encoder B
AMIN	Digital output MIN
AMAX	Digital output MAX
AOK	Digital output OK
SY In	Synchronization In
SY OUT	Synchronization OUT
OLT	Brightness output
M	Maintenance

Wire Colors according to DIN IEC 757

BK	Black
BN	Brown
RD	Red
OG	Orange
YE	Yellow
GN	Green
BU	Blue
VT	Violet
GY	Grey
WH	White
PK	Pink
GNYE	Green/Yellow

Table 1

Working Distance	20 mm	200 mm	1000 mm
Visual Field	16 × 12 mm	120 × 90 mm	600 × 450 mm

Specifications are subject to change without notice