InoxLock Set

Z0011

Part Number

Technical Data

Mechanical Data	
Material	Stainless Steel 316L
Material Sealing	Silicone (FDA)
Packaging unit	1 Piece
Mounting Number	490

- **Can be glued in**
- **Can be pressed in over fit, see drawing (1)**
- **Can be welded over holes Ø 5 mm, see drawing (2)**
- **For mounting in your installation**

Complementary Products

Mounting Tool Z0012

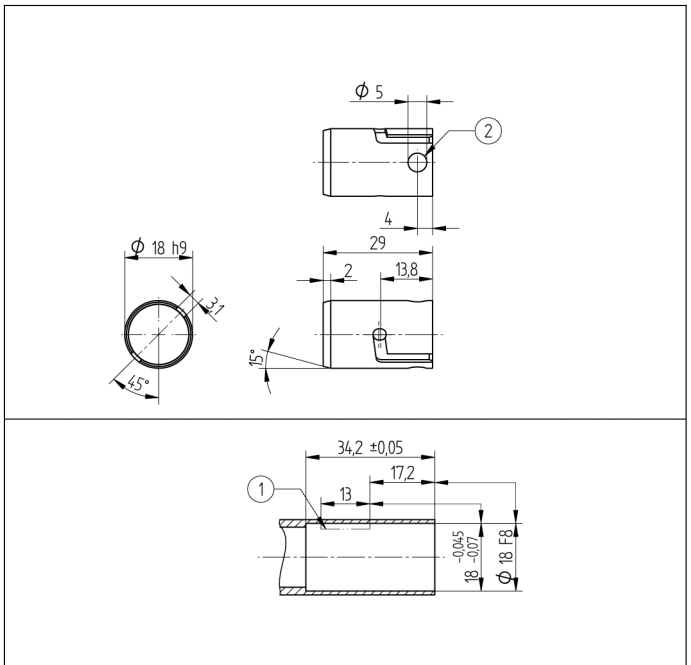

All dimensions in mm (1 mm = 0.03937 Inch)

RoHS

Specifications are subject to change without notice